KEY

TO BE READ IN CONJUNCTION WITH;
571-07-09-004 - BOUNDARY TREATMENT PLAN

- BOUNDARY TYPE A - 1.8M CLOSE BOARDED TIMBER FENCE
- BOUNDARY TYPE B - 900MM HIGH TIMBER FENCING ATOP 1200MM HIGH STONE WALL WITH 2100MM HIGH STONE POSTS
- BOUNDARY TYPE C - 1100MM HIGH METAL RAILINGS WITH METAL GATE
- BOUNDARY TYPE D - 1100MM HIGH CLOSE BOARDED TIMBER FENCING
- BOUNDARY TYPE E - 1100MM HIGH STONE WALL

BOUNDARY TREATMENT REFERENCES

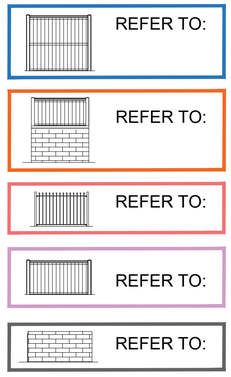

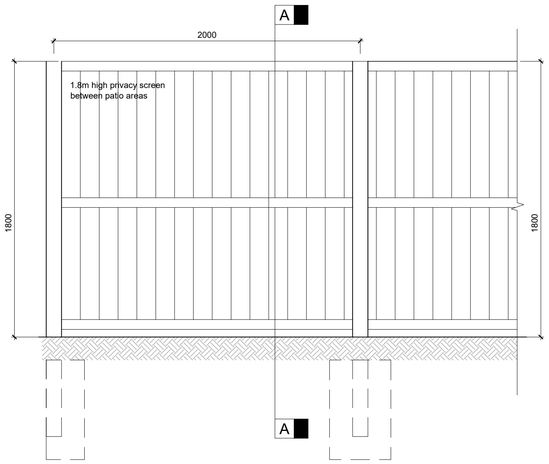

ELEVATION
SCALE 1:20

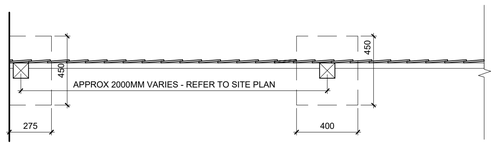

PLAN
SCALE 1:20

BOUNDARY TYPE A

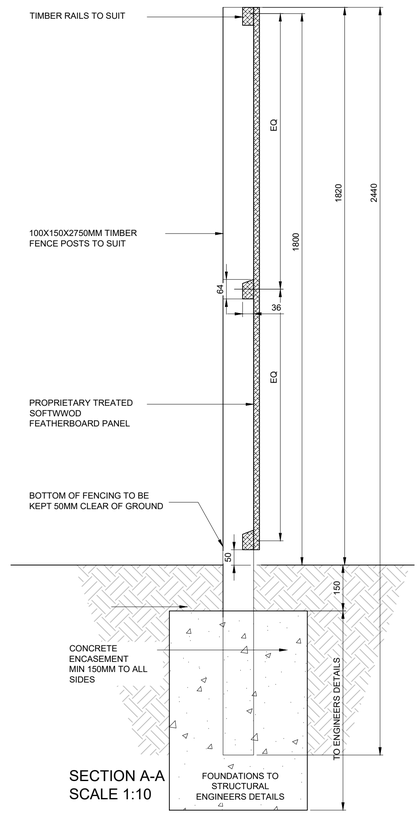

SECTION A-A
SCALE 1:10

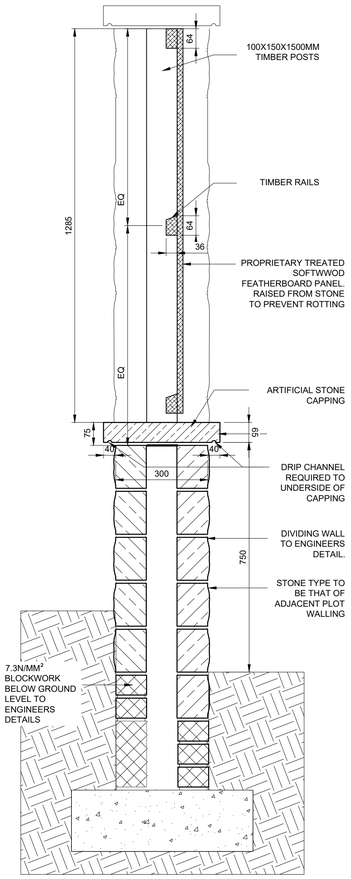

SECTION B-B
SCALE 1:10

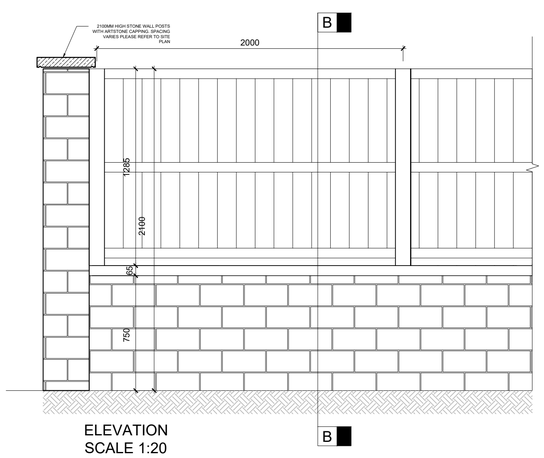

ELEVATION
SCALE 1:20

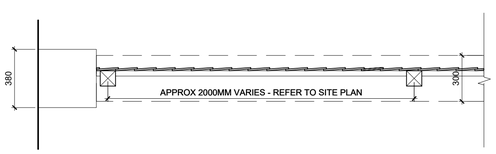

PLAN
SCALE 1:20

Boundary Type B

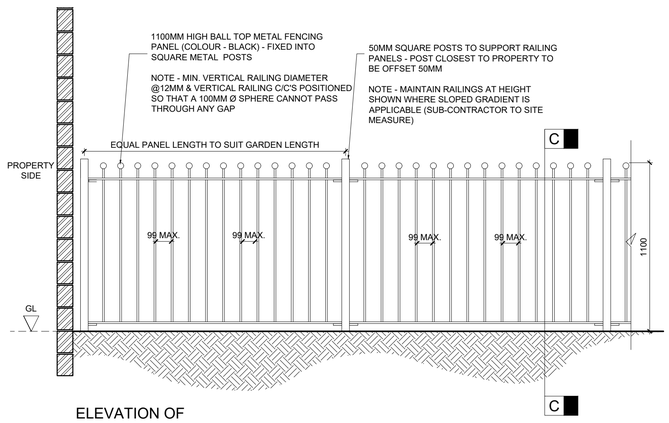

ELEVATION OF
RAILINGS @
1:20

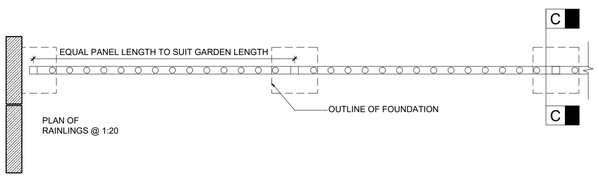

PLAN OF
RAILINGS @ 1:20

Boundary Type C

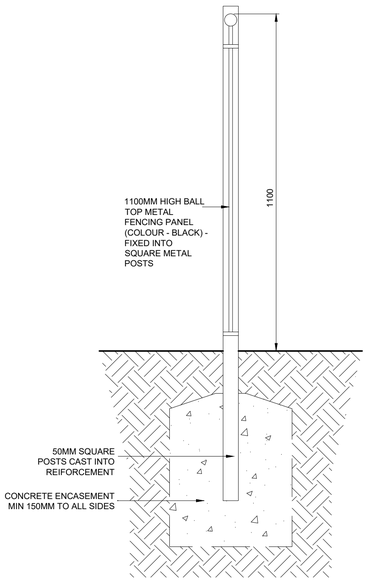

SECTION C-C
SCALE 1:10

STAGE 1 INFORMATION/ COMMENTS

STAGE 2 CONSTRUCTION ✓

NOTE.

THIS DRAWING IS TO BE READ IN CONJUNCTION WITH BBA (BREWSTER BYE ARCHITECTS) PROPOSED BOUNDARY TREATMENTS DRAWING (90) 001 AND S.E. (STRUCTURAL) & C.E. (CIVIL ENGINEERS) RELEVANT DRAWINGS.

FOR MATERIAL SPEC. REFER TO BBA 'PROPOSED MATERIALS/ FINISHES SCHEDULE'.

ALL TIMBER SIZES ARE INDICATIVE/ DESIGN INTENT ONLY AND SUBJECT TO SPECIALIST JOINERS DETAIL, SPEC. AS THEIR APPOINTED DESIGN RESPONSIBILITY!

ALL PRODUCTS AND MATERIALS TO BE INSTALLED IN STRICT ACCORDANCE WITH RELEVANT MANUFACTURERS' GUIDANCE AND INSTRUCTIONS, BY PERSONS SUITABLE CERTIFIED/ APPROVED BY MANUFACTURER.

DO NOT SCALE OFF THIS DRAWING; USE FIGURED DIMENSIONS ONLY.

ALL DIMENSIONS ARE IN MILLIMETRES, UNLESS NOTED OTHERWISE.

ALL DETAILS AND DIMENSIONS ARE TO BE CHECKED BY THE WORK RELATED CONTRACTUALLY RESPONSIBLE CONTRACTOR AND/OR SUB-CONTRACTOR PRIOR TO COMMENCEMENT OF WORKS.

ANY AMBIGUITIES, OMISSIONS AND ERRORS ON DRAWINGS ARE TO BE BROUGHT TO BBA ATTENTION IMMEDIATELY.

ANY DISCREPANCIES ARE TO BE REPORTED TO BBA.

ANY CONFLICTING INFORMATION TO BE BROUGHT TO THE ATTENTION OF BBA.

BASE FIXING TO BE AGREED BY PRINCIPAL CONTRACTOR.

TIMBER TO BE SUITABLE TREATED FOR EXTERNAL ENVIRONMENT; WATERPROOF, BACTICIDE, FUNGICIDE & INSECTICIDE.

ALL TIMBER ENDS TO BE SUITABLY TREATED WITH END-GRAIN SEALANT.

ALL FENCE POSTS BE SUITABLY TREATED IN ACCORDANCE WITH TRADA RECOMMENDATIONS & BS 8417:2011 CLASS 4.

REV	COMMENT	DATE	DR	CH
C	BOUNDARY TYPE B WALL AMENDED FROM 1135MM TO 750MM	01/12/22	SA	
B	CONSTRUCTION ISSUE - UPDATED TO LATEST COMMENTS	22/02/22	HM	
A	Drawing Issue	26/01/22	HM	

THIS DESIGN IS COPYRIGHT ©

BBA
BREWSTER BYE ARCHITECTS
5 NORTH HILL ROAD, LEEDS, HEADINGLEY, LS6 2EN
T: 0113 2754000
info@brewsterbye.co.uk www.brewsterbye.co.uk

CLIENT

urban

JOB TITLE

NEWSOME PONDS
NEWSOME ROAD

PROPOSED BONDARY TREATMENTS DETAILS

Drawn: SA Scale: AS @ A1
Date: JAN 22 Checked: MH

DWG No: 571/07(90)001 REV C