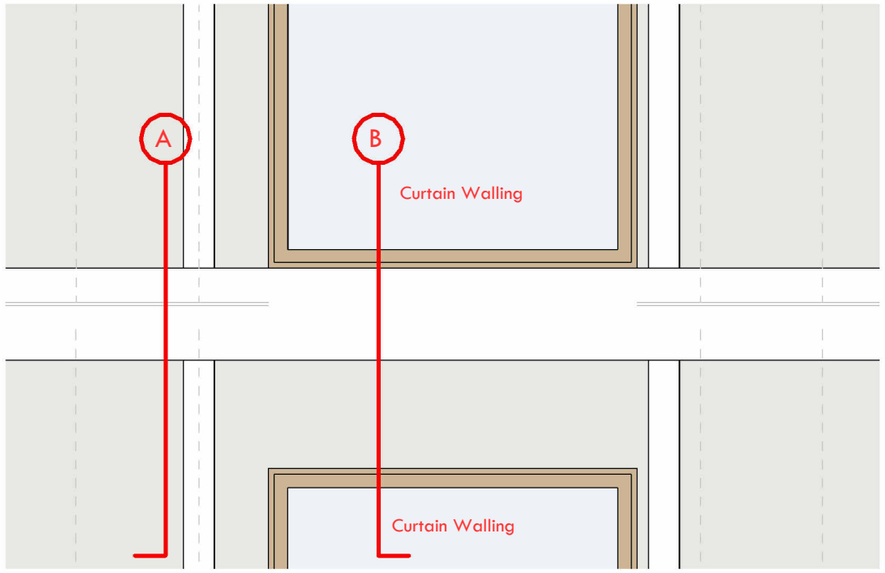

Typical Brise Soleil Elevation

1 : 20

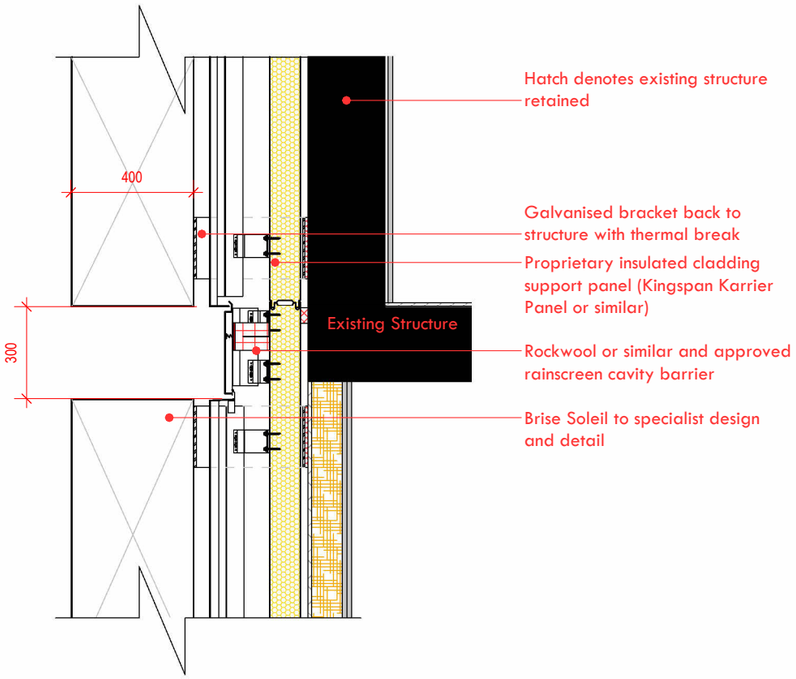

Typical Brise Soleil Section - Detail A

1 : 20

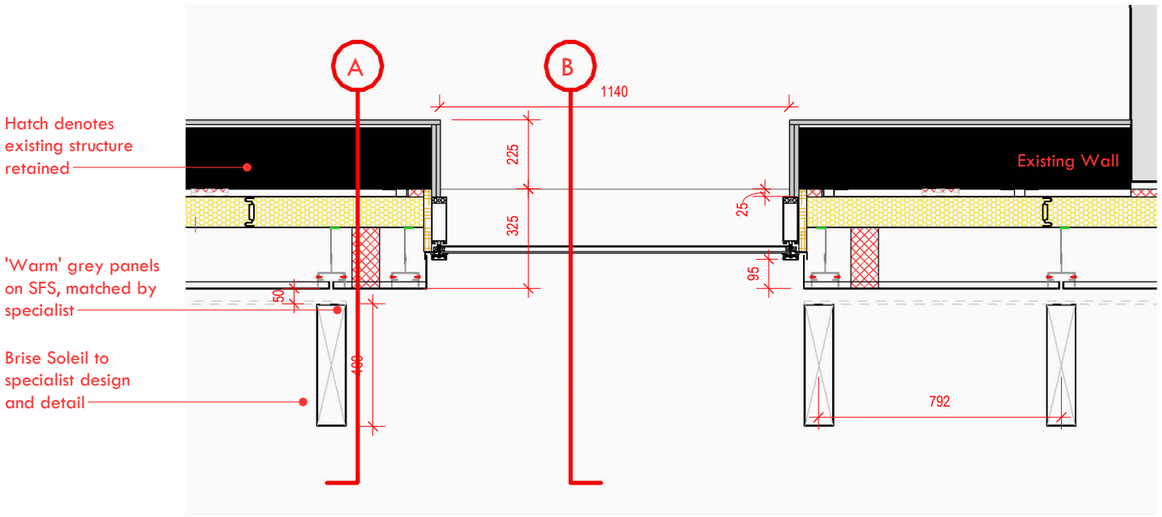

Typical Wall Junction Plan - Detail B

1 : 20

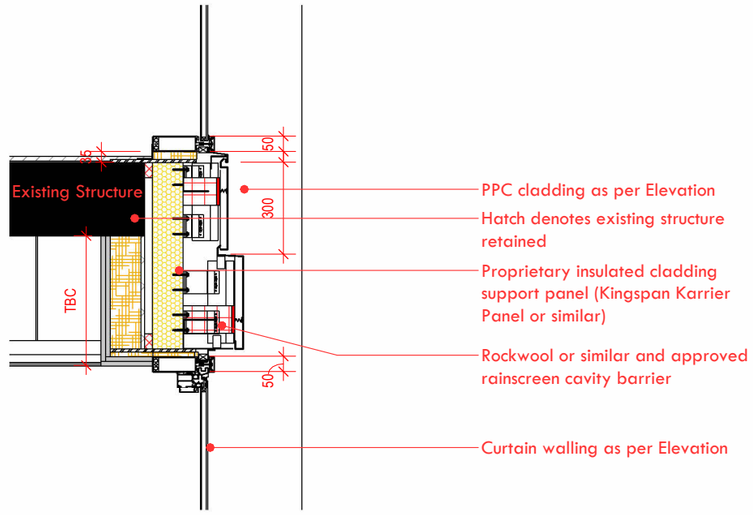

Typical Wall Section B

1 : 20

nc architecture

PROJECT
Crown House

SITE ADDRESS
Crown House
Southgate
Huddersfield

POSTCODE
HD1 1DE

DRAWING
Typical Wall Section Sheet 02

PROJECT NO.	DWG NO.	REV NO.	SCALE
18221	P-402	A	1 : 20

DRAWN BY	CHECKED BY
LF	MM

PLANNING

REV	DESCRIPTION	INTL.	CHK.	DATE
-	As per Client comments	LF	SW	20.02.23
A	Updated Elevations	LF	MM	04.04.23

nc architecture
The Island, St. Ann's Parade,
Wilmslow, Cheshire SK9 1HG

T: 01625 536 767
E: info@ncarchitecture.com
W: www.ncarchitecture.com

RIBA Chartered Practice
Architects Registration Board

NOTES: All works are to be undertaken in accordance with the Building Regulations, and the current British Standards. All proprietary materials and products are to be used and installed in strict accordance with the manufacturer's recommendations. Figured dimensions to be followed in preference to scaled. All dimensions to be checked on site, in the event of any discrepancy refer to the Architect. This drawings remains the copyright of the Architect and may not be copied in whole or in part without prior written consent.
© Neil Collins Homes Ltd. t/a NC Architecture,