IF IN DOUBT ASK	DO NOT SCALE

1.65m HIGH WALL

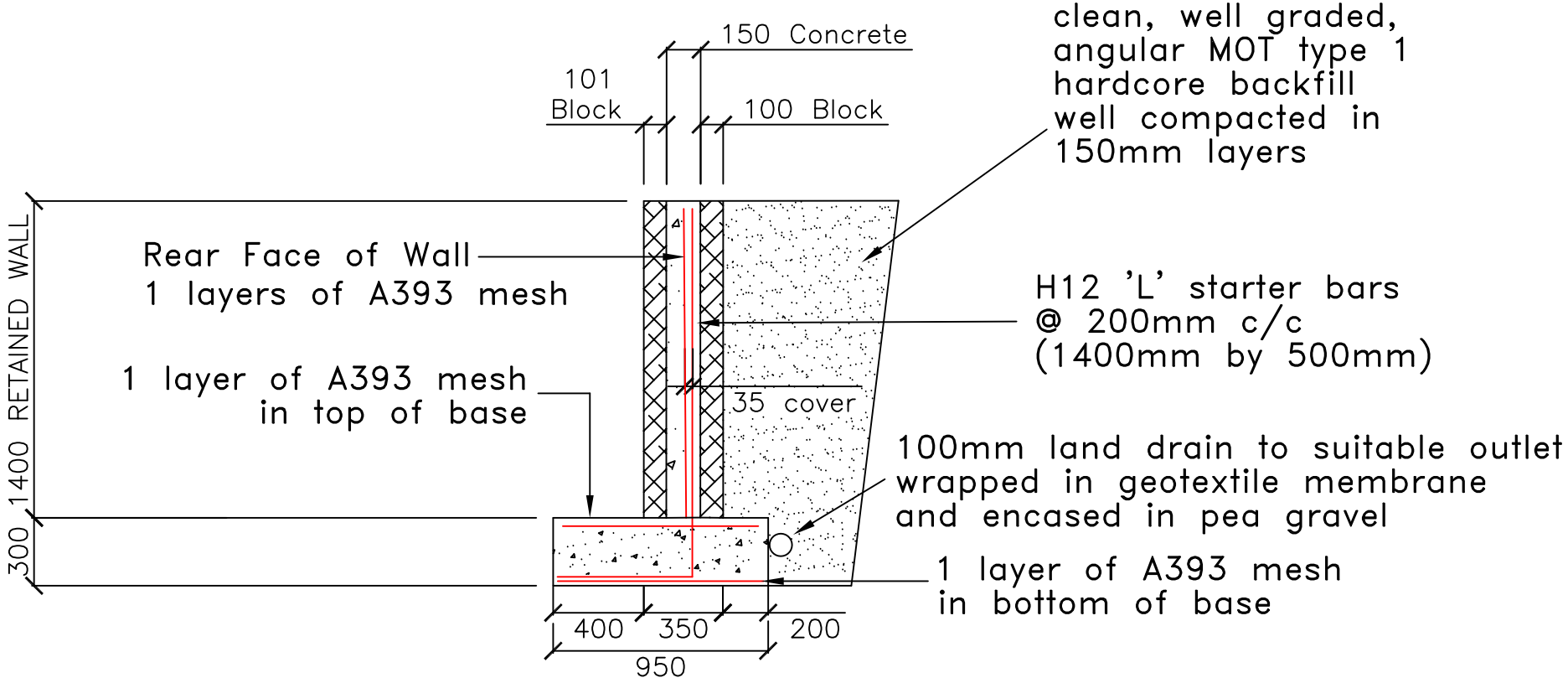

Notes:
1. All concrete grade C35 minimum.
2. All re-bar cover 35mm.
3. 100mm perforated drain behind wall encased in free draining material taken to suitable outlet.
4. All temporary shoring works are the responsibility of the main contractor.
5. All tanking, DPM and insulation to architects details.
6. All Blockwork 7.3N/mm2 Compressive strength.

CLIENT.	MR & MRS STRINGER
PROJECT.	TOWN END ROAD, HOLMFIRTH
REF. No.	MDL – 7801

TITLE
RETAINING WALL FOR
FOLD END, TOWN END ROAD
HOLMFIRTH
HD9 1XT

SCALE (A3) 1:20 | DRG.No. MDL-7801-002 | REV. 01

REV.	DATE	DESCRIPTION	BY	CHK
01	25.10.2022	ISSUED FOR BUILDING CONTROL APPROVAL	MA	DSH

MarshDesignLtd
STRUCTURAL ENGINEERS
www.marshdesign.co.uk

Marsh Design Limited
The Stable Block, Buckden Mount
8, Thornhill Road, Edgerton
Huddersfield, HD3 4AU
t: (01484)341428
e: info@marshdesign.co.uk
w: www.marshdesign.co.uk

THIS IS A CAD DRAWING AND MUST NOT BE MODIFIED MANUALLY. THE DRAWING IS THE PROPERTY OF MARSH DESIGN LIMITED. IT IS STRICTLY CONFIDENTIAL AND MUST NOT BE COPIED, TRACED OR LOANED WITHOUT THEIR PERMISSION.