DATA SHEET

ROLECEV

WALLPOD

Intelligent EV charging unit

Manufactured in the UK

WALLPOD

Intelligent EV charging unit

The WALLPOD is an affordable and reliable EV charging unit, which is ideal for both domestic and commercial locations, providing up to 7.4kW fast charging.

This future-proof OCPP compliant unit can offer a simple plug & charge or pay-to-charge solution via the EV driver's smartphone and/or RFID card/fob through any chosen OCPP back-office management system.

Feature-rich, this EV charger supports dynamic load balancing and is equipped with PME fault detection, so there is no requirement for an earth rod, reducing installation costs.

Domestic users can also charge their vehicle as sustainably as possible using their solar PV or other home renewables for a zero-cost, zero-carbon charge.*

*App dependent feature

FREE app & support

Domestic customers benefit from 3 years app connectivity and support included*

*Data fees may apply if connecting via 4G

Product features

- Suitable for both domestic and commercial installations
- Plug & charge, mobile app or RFID controlled charging
- Universal charging socket or Type 2 tethered lead
- Up to 7.4kW charging output
- TruePEN PME fault detection (no earth rod required)
- Dynamic load balancing (CT clamp & cable included)
- Solar PV, battery storage or wind turbine integration*
- Alexa & Google assistant compatible*
- OCPP 1.6 compliant (can integrate with any back-office)
- Over-the-air firmware / software updates
- Built-in over current & 6mA DC leakage protection
- Cable lock security feature (can be permanently locked by user)
- Integrated RFID reader
- MID-approved energy metering
- 4G / Wi-Fi / Ethernet connectivity
- IK10 impact resistant design
- Wall or post mounted
- OZEV grant fundable
- Designed & manufactured in the UK

Rolec EV's chargepoint management platform:

VendElectric

Other preferred app & back-office partners:

ev.energy

MONTA

Fuuse

ChargePlace Scotland electric vehicle charging

Electric Miles

*App dependent feature

OCPP 1.6 compliant

Ability to integrate with any OCPP compliant back-office management system and app.

Easy to operate

Three quick and easy ways to operate: mobile app, RFID cards and fobs or plug & charge.

Office for Zero Emission Vehicles

Eligible for grant funding

This range is approved for the OZEV EV Chargepoint Grant & Workplace Charging Scheme (WCS).

4G / Wi-Fi / Ethernet enabled

Complete with secure 4G, Wi-Fi and Ethernet connectivity, ensuring chargers are always online 24/7.

Branding & colour options available

Rolec offer a bespoke chargepoint branding service; from logos & brand colours, to vinyl wraps.

No earth rod required

Equipped with built-in TruePEN PME fault detection, saving on installation time and costs.

The details

UP TO 7.4KW

This single phase charger provides up to 7.4kW fast charging.

WALLPOD is compatible with all EVs & PHEVs, charging at the fastest speed possible, ensuring vehicles are ready to go in no time.

CHARGE FOR FREE!

Sync your solar PV, battery storage or wind turbine setup to benefit from sustainable, zero-cost, zero-carbon charging.

Smart home integration is also supported, so you can control your charger using Alexa or Google assistant.*

ACCURATE BILLING

Built-in MID-approved energy metering ensures accurate consumption reporting, which is essential for businesses and residential car parks, wishing to bill for their usage. Use our back-office management platform to generate revenue by setting your own tariffs.

SAFE AND SECURE

Rest assured, Rolec's entire EV chargepoint range meets the currently required safety and security standards.

Over-the-air updates allow the chargers to receive the very latest features, ensuring a safe and future-proof product 24/7.

3 YEAR WARRANTY

Rolec EV chargepoints are designed, developed and manufactured in the UK and come with a 3 year warranty included as standard, for added peace of mind on your investment.

*App dependent feature

Specifications

Product Overview:

	Connection Type	Charging Output	Input Supply	Unit Colour	Product Code
Single Phase Units	1x Type 2 (IEC 62196) charging socket	Up to 7.4kW (32A)	1x 32A Single Phase 230V AC (±10 %) 50/60Hz	Grey	ROLEC4020G
				White	ROLEC4020W
				Black	ROLEC4020B
	1x Type 2 (IEC 62196) 5m tethered lead	Up to 7.4kW (32A)	1x 32A Single Phase 230V AC (±10 %) 50/60Hz	Grey	ROLEC4140G
				White	ROLEC4140W
				Black	ROLEC4140B
	1x Type 2 (IEC 62196) 10m tethered lead	Up to 7.4kW (32A)	1x 32A Single Phase 230V AC (±10 %) 50/60Hz	Grey	ROLEC4145G
				White	ROLEC4145W
				Black	ROLEC4145B

WallPod unit:

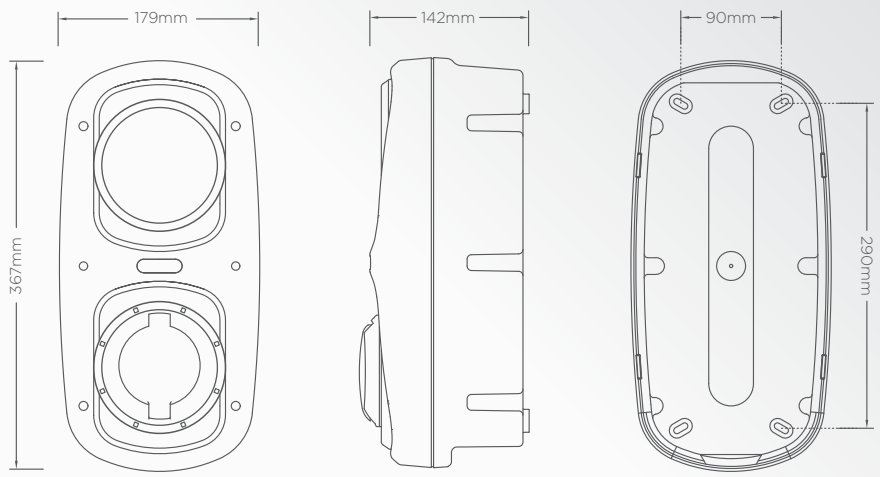

Type 2 charge gun holster:

Included with tethered units

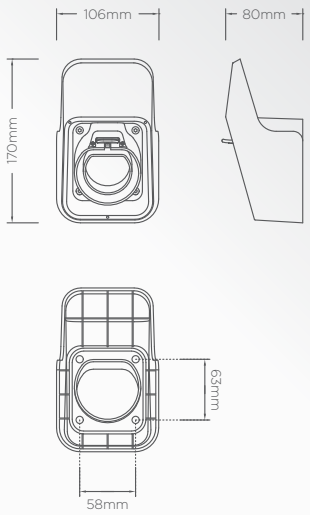

Specifications

Technical Data:

User Interface	• Mobile app • RFID reader (MIFARE ISO/IEC 14443 A) • Plug & charge • RGB LED status indicator halo – configurable
Charge Protocol	Mode 3 (IEC 61851-1)
Protection	• AC overload & fault current protection – A dedicated 30mA Type A RCBO or equivalent protection is required at source (see page 7 for options) • Over current protection • DC fault protection – 6mA • Lightning surge, over temperature protection • TruePEN PME fault detection – No earth electrode/rod required • Supports automatic dynamic load balancing (may require additional hardware) • Supports static load management (software configurable)
Cable Terminals	• Single Phase – 3x 50mm 1P + N + E
Communications	• 4G LTE Cat-1 (built-in nano SIM, subscription required) • Wi-Fi 802.11 b/g/n 2.4 GHz • RJ45 Ethernet connection • Bluetooth Low Energy (BLE 4.1) (for installer configuration purposes) • OCPP 1.6J • Cyber security – Data encryption level TLS 1.2
Energy Metering	Integrated Class 1 MID compliant metering
Standby Power Consumption	< 7.5W
Dimensions	179mm x 367mm x 142mm (W x H x D)
Weight	< 2.8kg (model dependant)
Environmental	• Ingress protection – Enclosure IP65, Socket IP54 • Impact protection – IK10 • Operating temperature – -30°C to +50°C • Operating humidity – 5% to 95%
Materials	High impact resistant Polycarbonate
Unit Colour	● Black ● Grey ○ White Branding available upon request
Certifications & Compliances	• EV Charging Compliance – EN 61851-1:2019, EN 61851-22:2002 • Smart Charge Points – (SI 2021/1467) Ex. Schedule 1 • Wiring Regulations – BS 7671:2018+A2:2022 • EMC Compliance – EN 61000-6-3:2007+A1:2011, EN 61000-6-2:2005, 2014/30 /EU, SI 2016/1091 • Safety Compliance (LVD) – EN 62368-1:2014, 2014/35/EU, SI 2016/1101 • Communications / RED – EN 62311:2008, 2014/53/EU, SI 2017/1206 • Environmental Protection – BS EN 60529:1992+A2:2013 • Impact Rating – BS EN 62262:2002+A1:2021 • Metering – 2014/32/EU, SI 2016/1153 • RoHS – 2011/65/EU, SI 2012/3032 • REACH – 1907/2006, REACH etc. (Amendment) Regulations 2021 • Certification Markings – CE & UKCA
Warranty	3 years

Options & accessories

Product Code	Item Description
RFID0010	RFID card
RFID0020	RFID fob
EVFP0010	Galvanised steel mounting post – 1350mm
EVFP0020	Box section powder coated mounting post
EVCB0020	Root mount protection barrier – 48mm
EVCB0040	Surface mount protection barrier – 48mm
EVPS0010	EV parking sign – A4 landscape (Other sizes are available)
EVPP0100	5m 32A Type 2 to Type 2 charging cable
EVPP0107	10m 32A Type 2 to Type 2 charging cable (Other cables are available, including Type 1 options)
EVIN0010	20A Single Phase EV Consumer Unit with Type A RCBO
EVIN0015	40A Single Phase EV Consumer Unit with Type A RCBO
EVRS0030	Remote Wall Mount For Type 2 Charge Gun Holster
ACSR0125	100A up to 35mm² Screened CT Clamp with 10m Cable

RFID0010
RFID0020

EVFP0020

EVPS0010

EVIN0010

ACSR0125

EVPP0100

Branding & colour options available

Rolec offer a bespoke chargepoint branding service; from logos & brand colours, to vinyl wraps. This can be arranged at time of order. Contact Rolec for details.

Brand names, logos and trademarks used herein remain the property of their respective owners. This listing of any firm or their logos is not intended to imply any endorsement or direct affiliation with Rolec Services Ltd. and is purely to demonstrate branding opportunities.

BUSINESSES

WORKPLACE | COMMERCIAL | DEVELOPMENT | RESIDENTIAL | DESTINATION | FLEET

VendElectric

- Full control of your own chargepoint network
- A future-proof and scalable solution
- Mapped network
- Customisable tariffs
- Generate revenue
- Smart reporting and analytical feedback
- Fleet management solutions
- Automatic fault notifications
- Over-the-air updates
- Optional electrical load management:
  (Ideal for sites where the collective load may be greater than the electrical supply)

Other preferred back-office partners:

MONTA

Fuuse

ChargePlace Scotland
electric vehicle charging

Managing chargepoints

Rolec EV's range of AC fast and DC rapid chargepoints are suitable for all types businesses. OCPP integration allows these units to be managed by any compliant back-office, including Rolec EV's own management platform, VENDELECTRIC.

Operating chargepoints

There are 3 quick and easy ways for drivers to operate the chargepoints: mobile app, RFID cards and fobs or plug & charge.

VendElectric app

Manage your charging activity whilst benefiting from an variety of features:

- Easily find and navigate to a chosen destination using the chargepoint map
- Sort and save favourite locations
- View current & past charge sessions
- Review statistics and analytical data
- Exportable data
  (ideal for submitting benefit-in-kind claims)
- Live charge session notifications
- Virtual wallet for quick activation
- Multiple EVs can be added and used on a single registered account

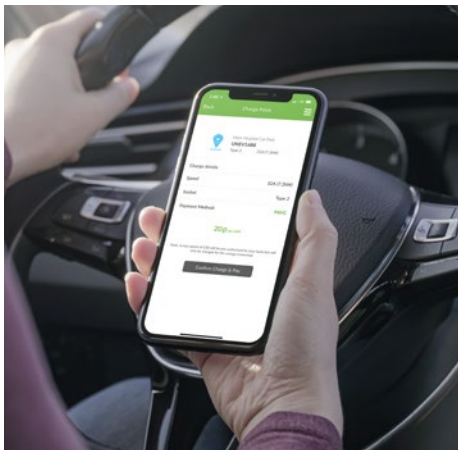

DOWNLOAD THE APP

GET IT ON Google Play

Download on the App Store

RFID card/fob

Ideal for workplace employees who frequently use the same charging points, whether for their own or their company vehicle. Hosts can assign an RFID to either the driver or a vehicle (VRM).

For more about **VendElectric**, including data management pricing & plans, visit **www.rolecserv.com/chargepoint-management-system**

HOMES

HOUSES | FLATS | RENTED ACCOMMODATION | PRIVATE GARAGES & PARKING SPACES

Operating your chargepoint

Rolec EV's range of chargepoints for the home have been designed to provide an easy charging experience for EV drivers, allowing them to recharge their vehicle using their smartphone or handy RFID card/fob.

This range of chargepoints are OCPP compliant, enabling them to integrate with any compatible app the user desires.

Other preferred mobile app partners:

MONTA

Electric Miles

ev.energy app

Smart charging using the greenest, cheapest energy couldn't be simpler!

- Mobile app controlled charging
- Set a charging completion time
- Automatic off-peak hours charging
- Smart schedule charging feature
- Compatible with all EVs & PHEVs
- Energy tariff driven charging
- Review statistics and analytical data
- Earn rewards for smart charging
- Lock Your Charger feature
- Live charge session notifications
- Immediate charge boost button
- Understand your charging costs
- Sync with your solar panel setup

DOWNLOAD THE APP

GET IT ON Google Play | Download on the App Store

For more information about the ev.energy app, go to **ev.energy/solutions/app**

RFID card/fob

Great for EV drivers who want to quickly activate their home chargepoint. RFID cards or key fobs are easily accessible and add for a much simpler charging experience, which can also be used alongside the mobile app.

THIS DOCUMENT CONTAINS INFORMATION THAT IS SUBJECT TO CHANGE WITHOUT NOTICE.

The latest version of this publication can be downloaded at https://www.rolecserv.com/downloads-ev-charging

Illustrations of the product and user interface are for marketing purposes only.

Brand names, logos and trademarks used herein remain the property of their respective owners.
This listing of any firm or their logos is not intended to imply any endorsement or direct affiliation
with Rolec Services Ltd. and is purely to demonstrate branding opportunities.

© 2022 by Rolec Services. All rights reserved.

EVWD-V01-R1 WallPod Data Sheet

Manufactured
in the UK

t: 01205 724754
e: enquiries@rolecserv.co.uk
www.rolecserv.com