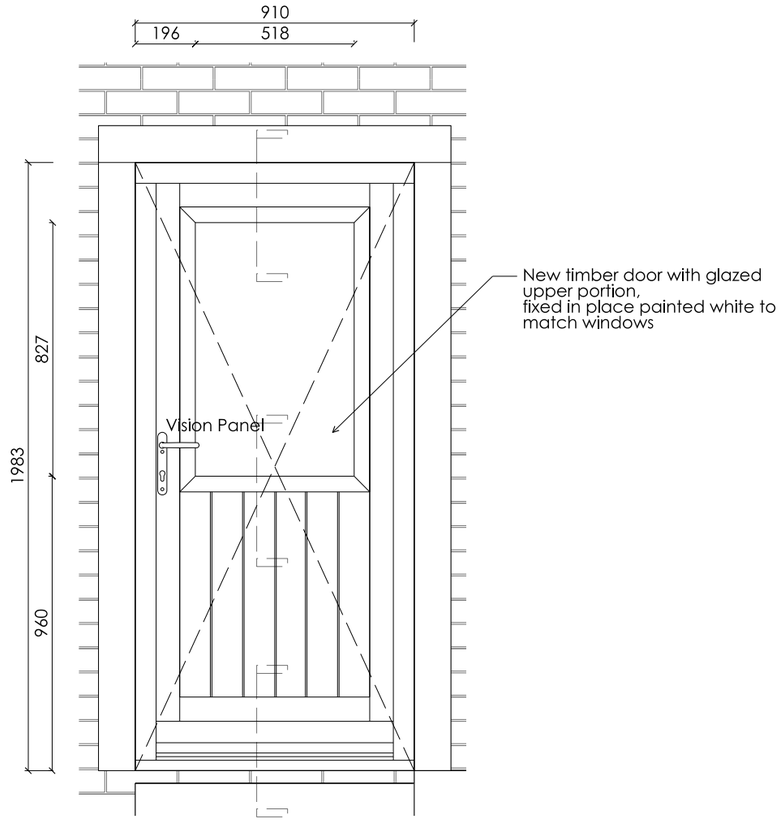

DOOR ELEVATION 1:20

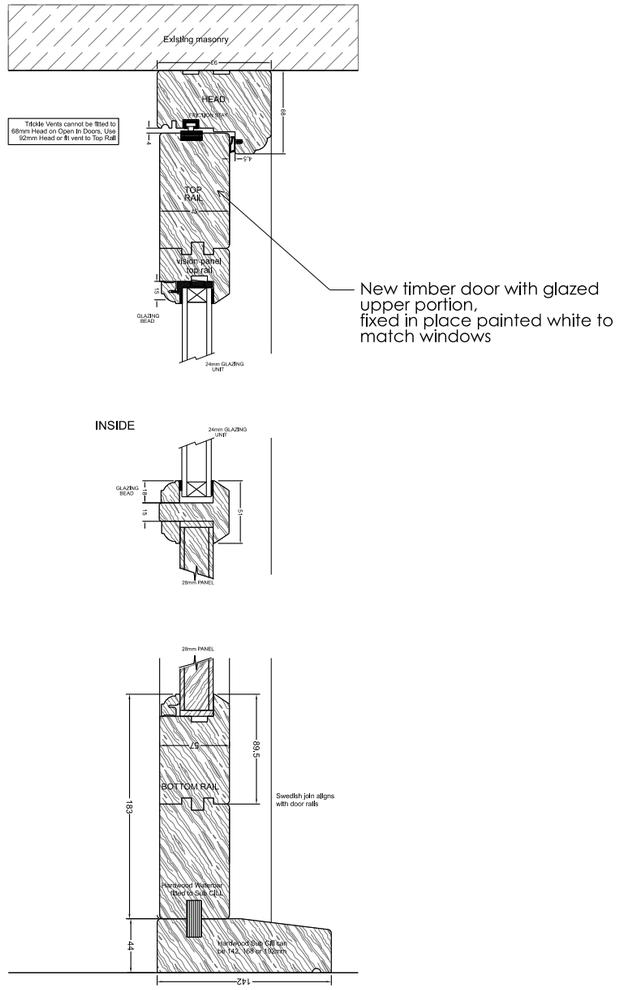

DOOR DETAILS 1:5

Rev	Description	By	Chk	ISSUE Date
S01	Issued for listed building consent	PODG	JHD	01.06.22

All dimensions to be as noted (to be checked on site prior to manufacture). Report any discrepancies to the Architect / CA immediately. This drawing is copyright of Dempsey + Gannon limited. drawings are not to be reproduced without written consent.

Project	23 & 25 Scarhouse Lane, Golcar	Project No.	22-04	Rev.	S03
		Dwg. No.	A(77)001	By	PODG
Title	Door elevation and details	Date	March 22	Chk.	JHD
		Scale	1:20 & 1:5 @A3	App.	

Dempsey+
Gannon