



Spectus WINDOW SYSTEMS

ELITE 70 - PROFILE GUIDE

OUTER FRAMES

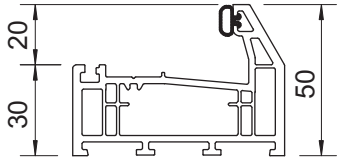

B01 Bevelled Slim Outer

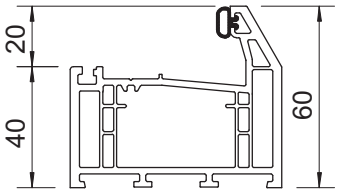

B02 Bevelled Intermediate Outer

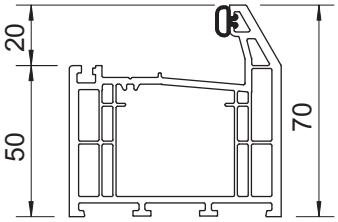

B03 Bevelled Large Outer

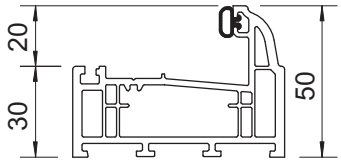

B05 Ovolo Slim Outer

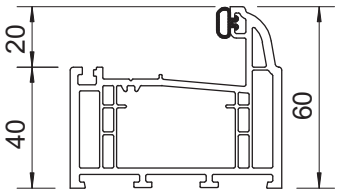

B06 Ovolo Intermediate Outer

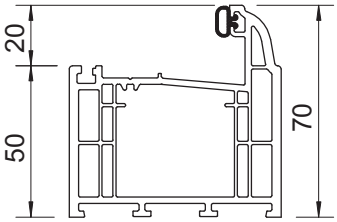

B07 Ovolo Large Outer

TRANSOMS/MULLIONS

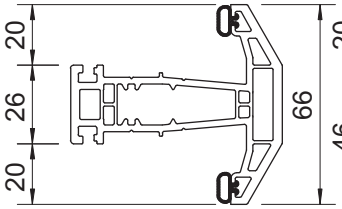

B10 Bevelled Slim ‘T’

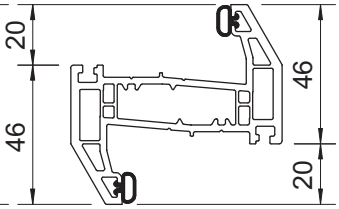

B11 Bevelled Slim ‘Z’

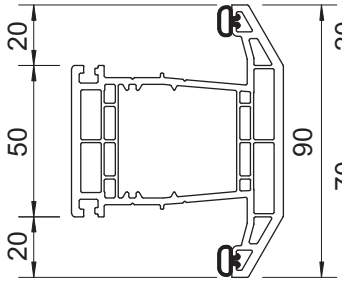

B16 Bevelled Large ‘T’

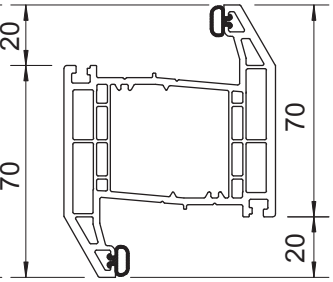

B17 Bevelled Large ‘Z’

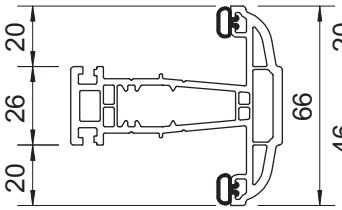

B20 Ovolo Slim ‘T’

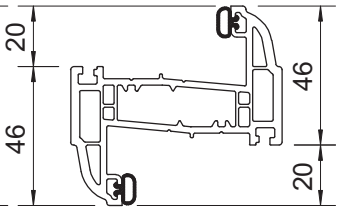

B21 Ovolo Slim ‘Z’

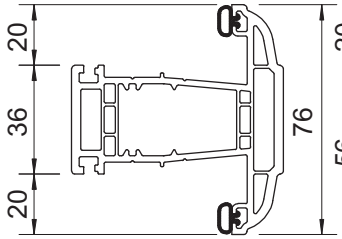

B22 Ovolo Intermediate ‘T’

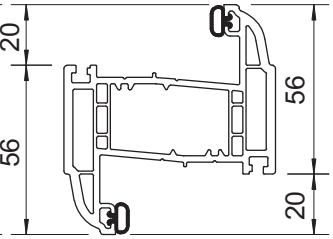

B23 Ovolo Intermediate ‘Z’

CASEMENT SASHES

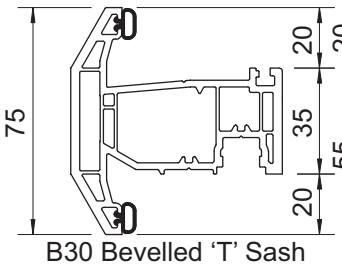

B30 Bevelled ‘T’ Sash

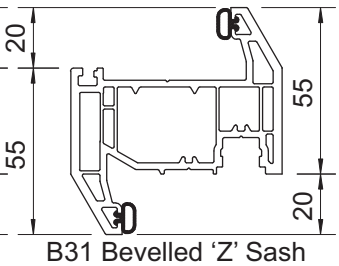

B31 Bevelled ‘Z’ Sash

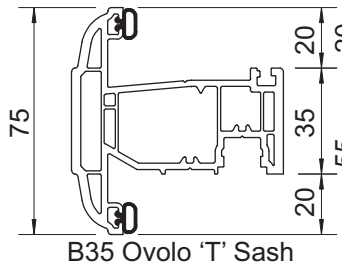

B35 Ovolo ‘T’ Sash

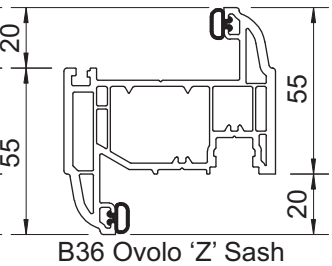

B36 Ovolo ‘Z’ Sash

spectus *n.* look, appearance, aspect

www.spectus.co.uk



Spectus WINDOW SYSTEMS

ELITE 70 - PROFILE GUIDE

MIDRAILS/MULLIONS

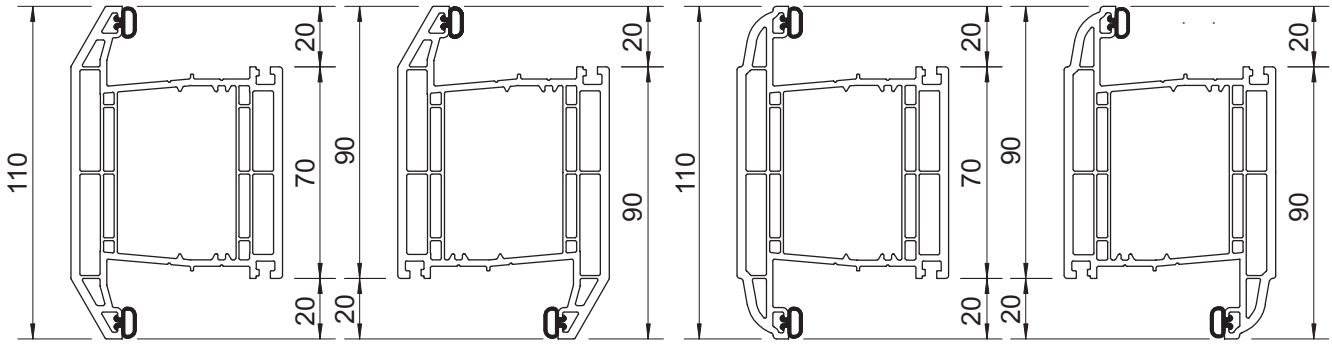

B14 Bevelled 'T' Midrail | B15 Bevelled 'Z' Midrail | B24 Ovolo 'T' Midrail | B25 Ovolo 'Z' Midrail

DOOR SASHES

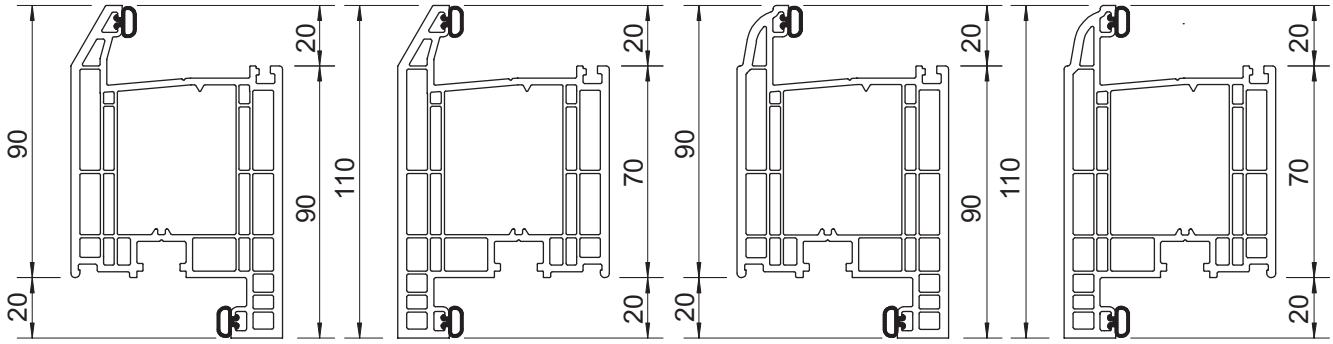

B40 Bevelled 'Z' Door Sash | B41 Bevelled 'T' Door Sash | B45 Ovolo 'Z' Door Sash | B46 Ovolo 'T' Door Sash

TILT & TURN SASHES

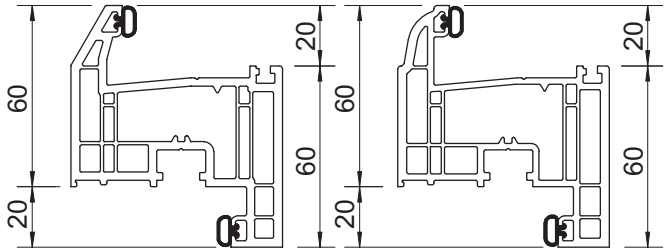

B33 Bevelled Tilt & Turn Sash | B38 Ovolo Tilt & Turn Sash

ANCILLARIES

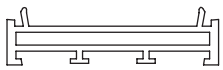

SW741 15mm Frame Packer

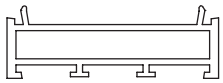

SW742 20mm Frame Packer

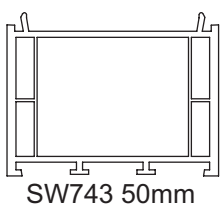

SW743 50mm Frame Packer



SW719 20mm Odd leg adaptor



B86 Weather bar



A80 Eurogroove cover



VS11 Georgian Bar

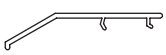

SW740 Clip on head drip



B76 Georgian Bar

GLAZING BEADS



B50 28mm Bevelled Bead | B60 28mm Ovolo Bead | B61 24mm Ovolo Bead | B62 28mm Step Ovolo Bead | B55 40mm Slim Bead | B66 44mm Ovolo Bead

spectus *n.* look, appearance, aspect
www.spectus.co.uk





ELITE 70 - PROFILE GUIDE

BAY COUPLINGS

B70 Bay Pole

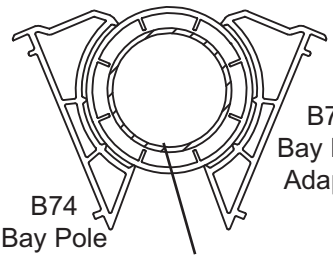

B72 135° Bay Post

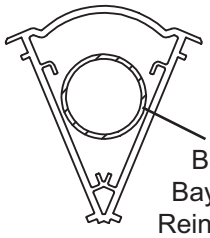

B73 150° Bay Post

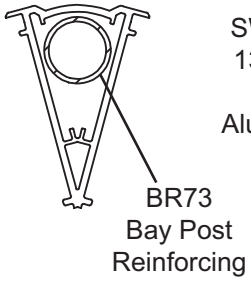

SW39 Bay Cover Strip

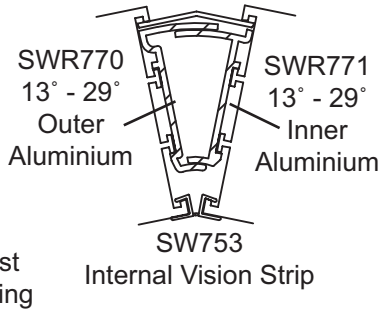

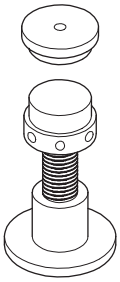

BB75
Bay Pole Jacking
Assembly
(Load Bearing)

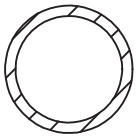

CBP360
Alternate Bay Pole
Reinforcing
(Load Bearing)



BR74
Reinforcing For
B71, B72 & B73



B89
90°, 135° & 150°
Quadrant

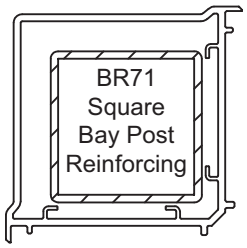

B71 Square Bay Post

SW39 Bay Cover Strip

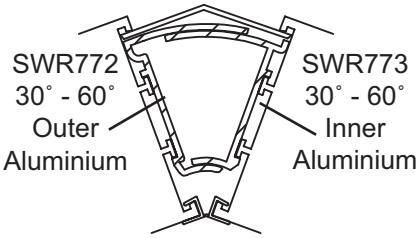

COUPLING MULLIONS



MCC
Structural Mullion Cover Cap

SW58 Ovolo Coupling
Mullion Cover Cap



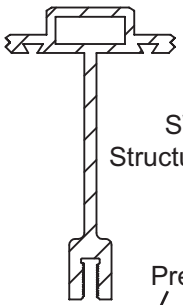

SWM20
Structural Mullion
Pressure Plate



SWR748
Coupling Mullion
(I-Beam)
Aluminium

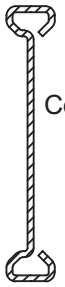

SWR748S
Coupling Mullion
(I-Beam)
Steel

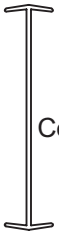

*SW754
Slim 'H'
Coupling Mullion



MCC Structural Mullion
Cover Cap



SW55 Coupling
Mullion Cover Cap

spectus *n.* look, appearance, aspect
www.spectus.co.uk



Spectus WINDOW SYSTEMS

ELITE 70 - GENERAL ASSEMBLIES

INTERNALLY BEADED CASEMENT (BEVELLED)

TYPICAL OPEN-OUT CASEMENT WINDOW

SPECIFICATION

Intermediate Outer Frame
Slim 'Z' Transom
'T' Section Sash
28mm Bevelled Glazing Bead
150mm Cill
Steel Reinforcing

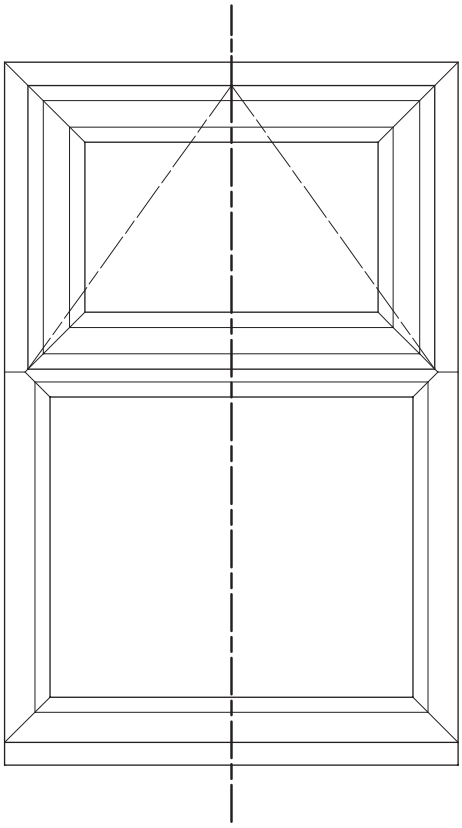

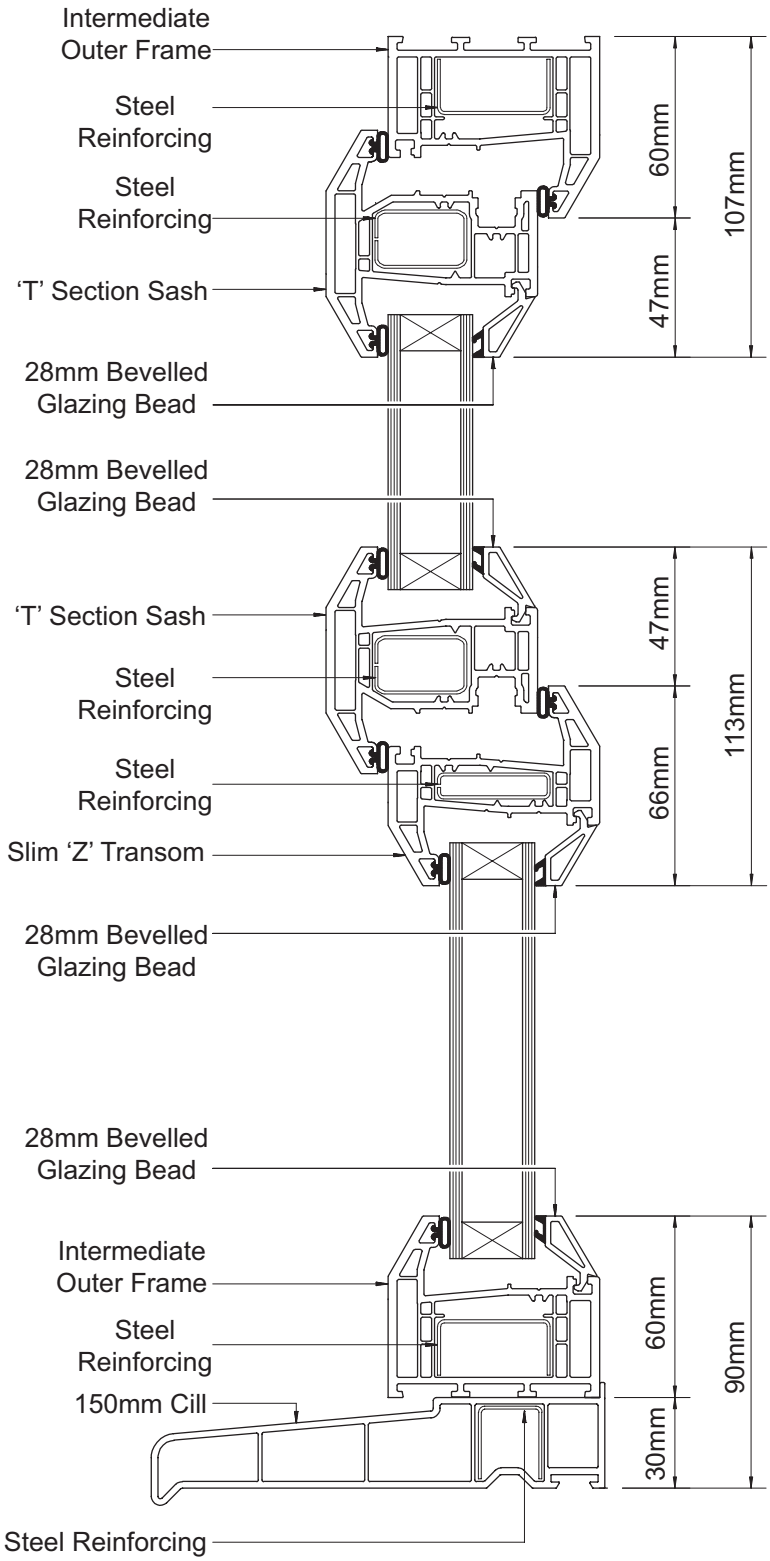

Note : All reinforcements shown are for diagramatical purposes only. For application, see pages Int.7 & Gen.5

spectus *n.* look, appearance, aspect
www.spectus.co.uk





Spectus WINDOW SYSTEMS

ELITE 70 - GENERAL ASSEMBLIES

INTERNALLY BEADED CASEMENT (OVOLO)

TYPICAL OPEN-OUT CASEMENT WINDOW

SPECIFICATION

Intermediate Outer Frame
Slim 'Z' Transom
'T' Section Sash
24mm Ovolo Glazing Bead
180mm Cill
Aluminium Reinforcing

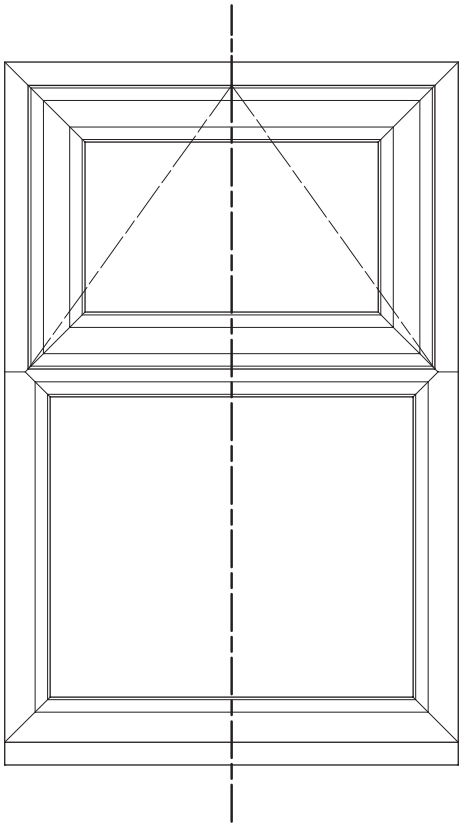

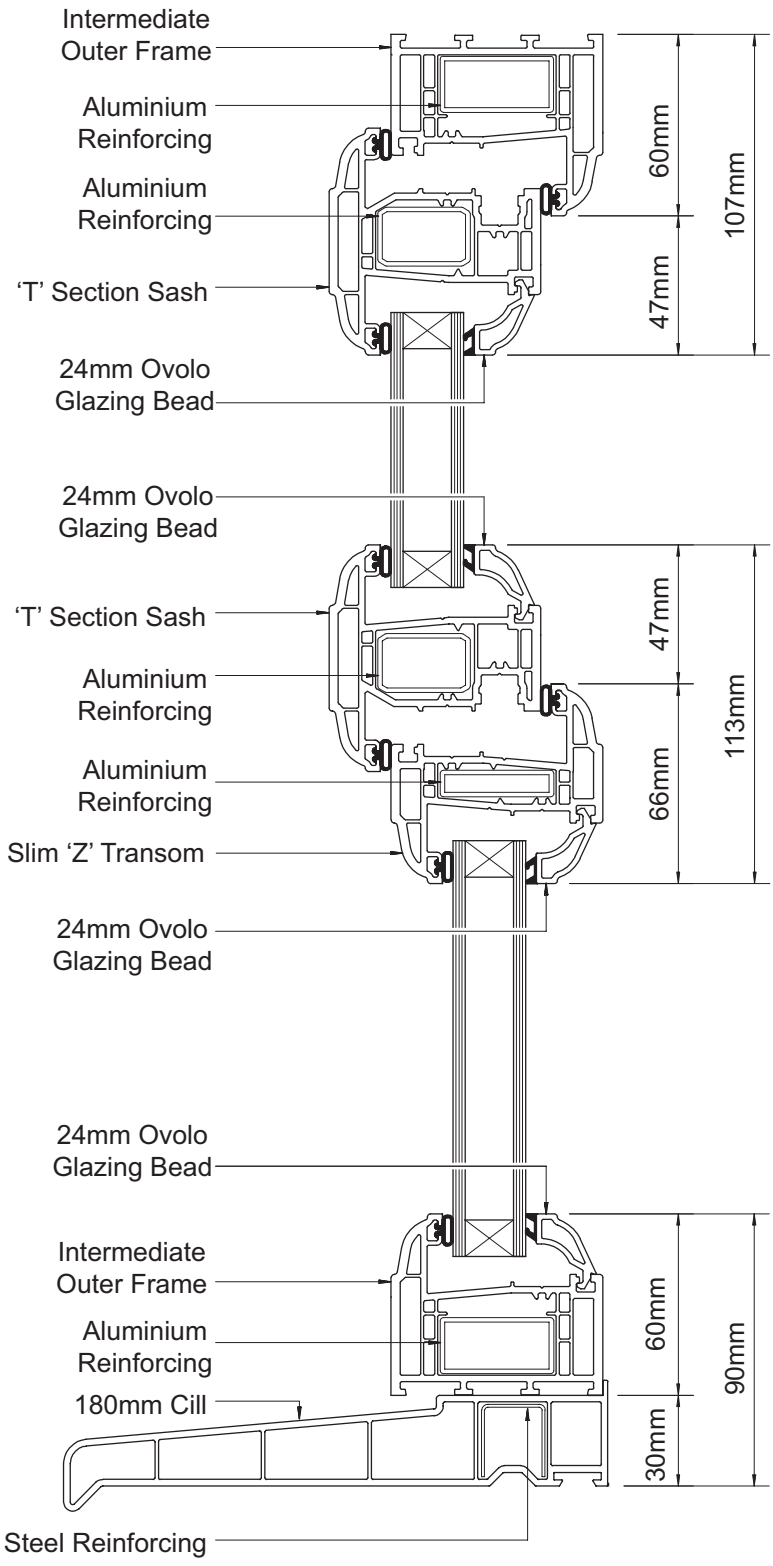

Note : All reinforcements shown are for diagramatical purposes only. For application, see pages Int.7 & Gen.5

spectus *n.* look, appearance, aspect
www.spectus.co.uk



Spectus WINDOW SYSTEMS

ELITE 70 - GENERAL ASSEMBLIES

EXTERNALLY BEADED CASEMENT (BEVELLED)

TYPICAL OPEN-OUT CASEMENT WINDOW

SPECIFICATION

Slim Outer Frame
Slim 'T' Transom
'Z' Section Sash
28mm Bevelled Glazing Bead
180mm Cill
Aluminium Reinforcing

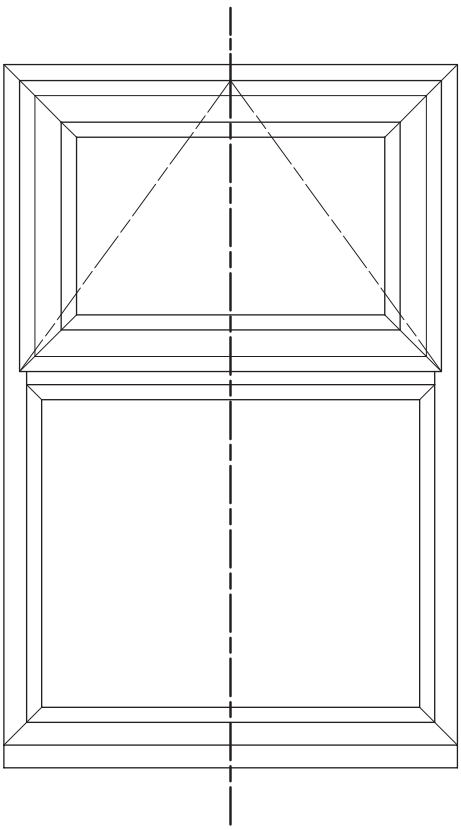

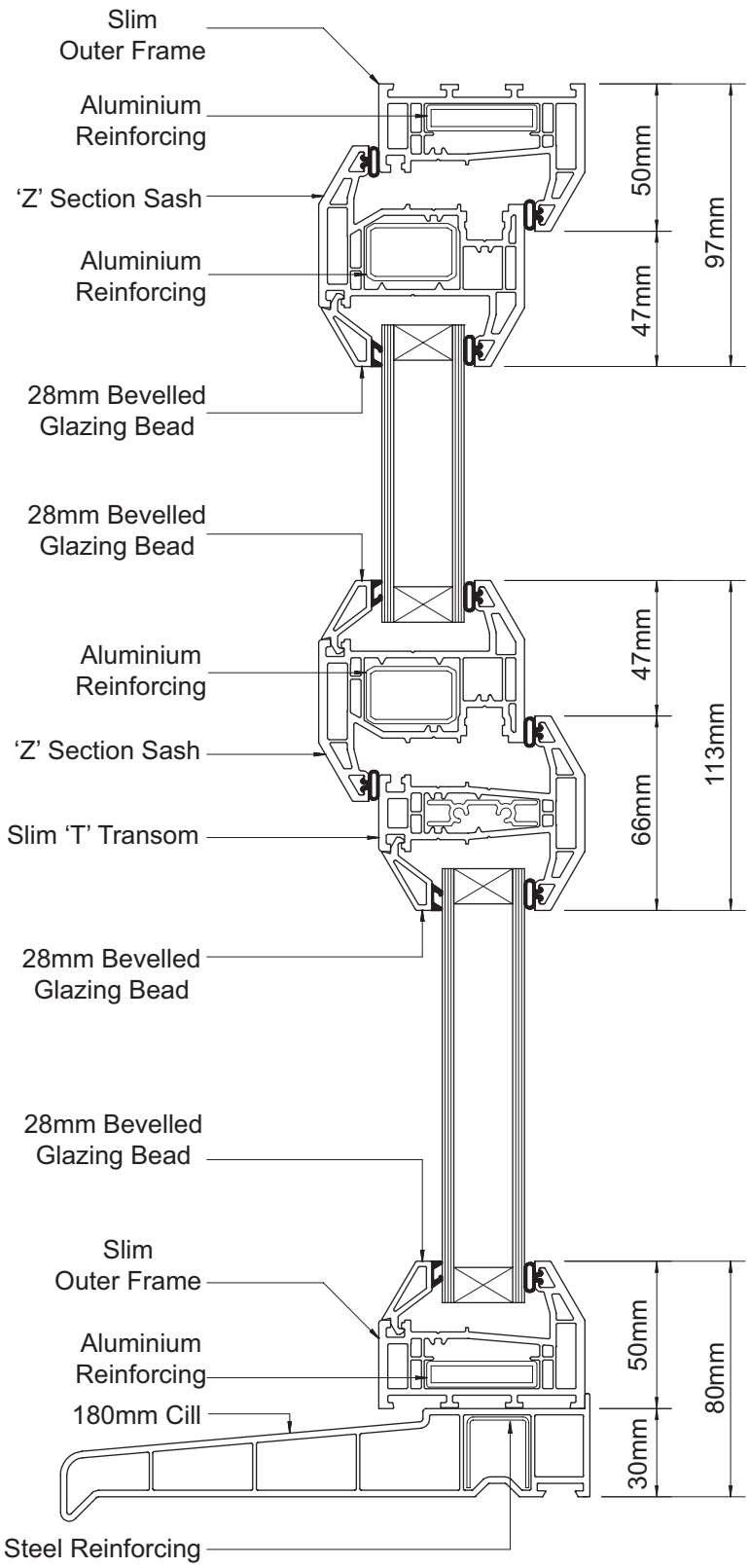

Note : All reinforcements shown are for diagramatical purposes only. For application, see pages Int.7 & Gen.5

spectus *n.* look, appearance, aspect
www.spectus.co.uk





Spectus WINDOW SYSTEMS

ELITE 70 - GENERAL ASSEMBLIES

EXTERNALLY BEADED CASEMENT (OVOLO)

TYPICAL OPEN-OUT CASEMENT WINDOW

SPECIFICATION

Slim Outer Frame
Slim 'T' Transom
'Z' Section Sash
28mm Ovolo Glazing Bead
150mm Cill
Steel Reinforcing

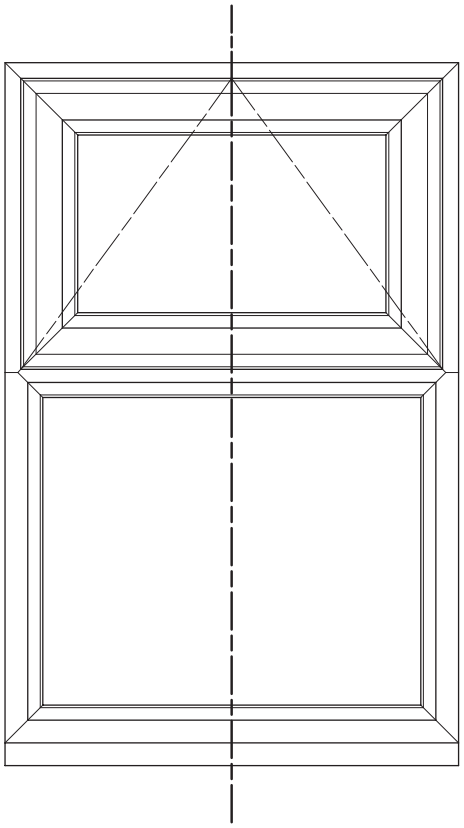

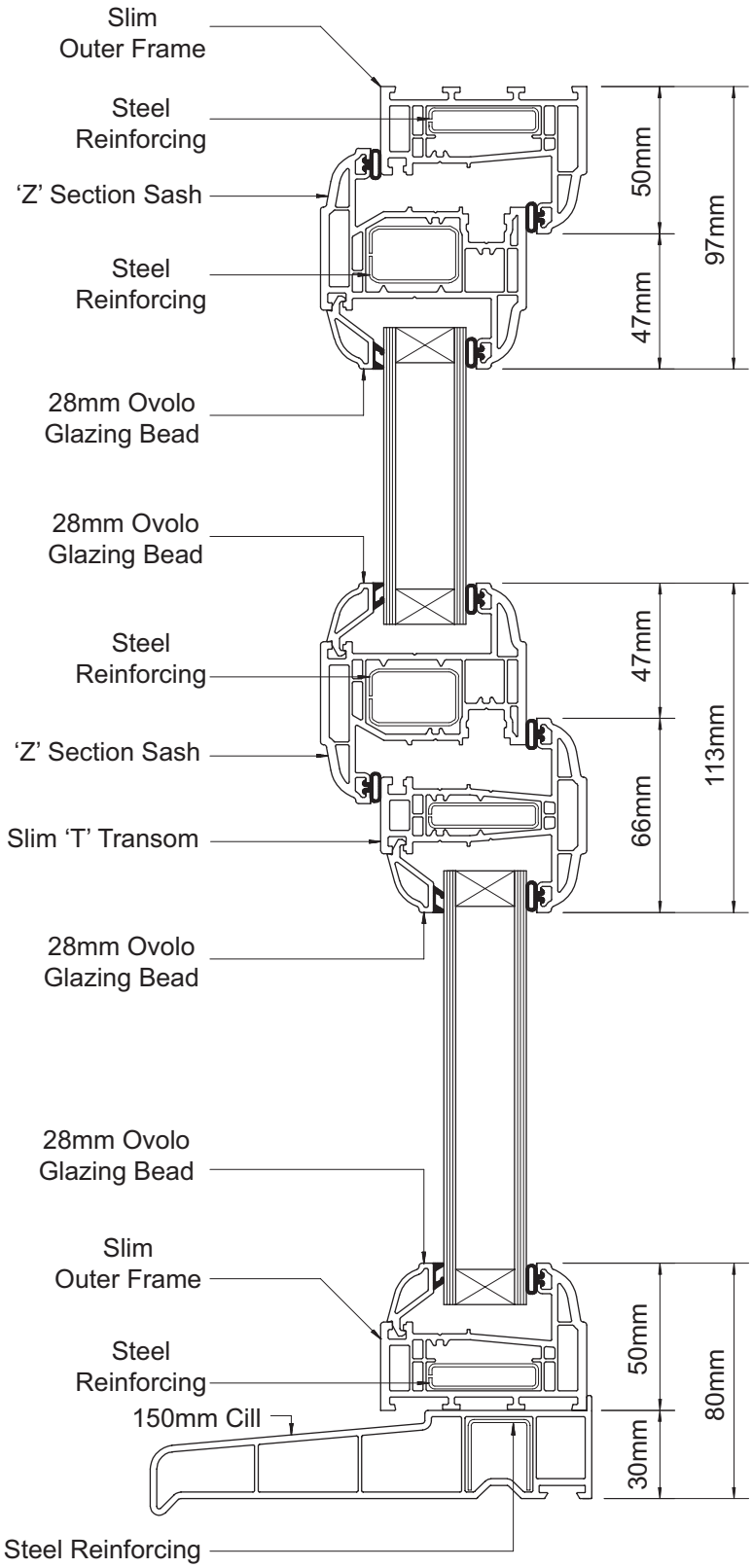

Note : All reinforcements shown are for diagramatical purposes only. For application, see pages Int.7 & Gen.5

spectus *n.* look, appearance, aspect
www.spectus.co.uk



Spectus WINDOW SYSTEMS

ELITE 70 - GENERAL ASSEMBLIES

TILT & TURN WINDOW (BEVELLED)

TYPICAL OPEN-IN TILT & TURN WINDOW

SPECIFICATION

Large Outer Frame
Large 'T' Transom
'Z' Section Tilt & Turn Sash
28mm Bevelled Glazing Bead
150mm Cill
Steel Reinforcing

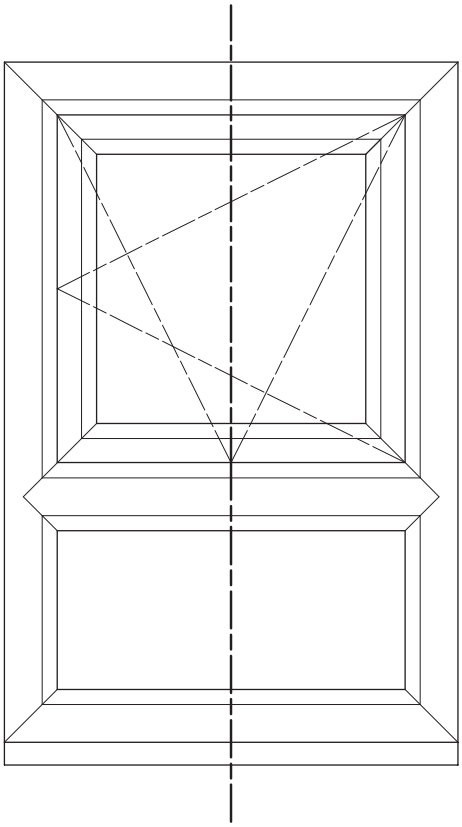

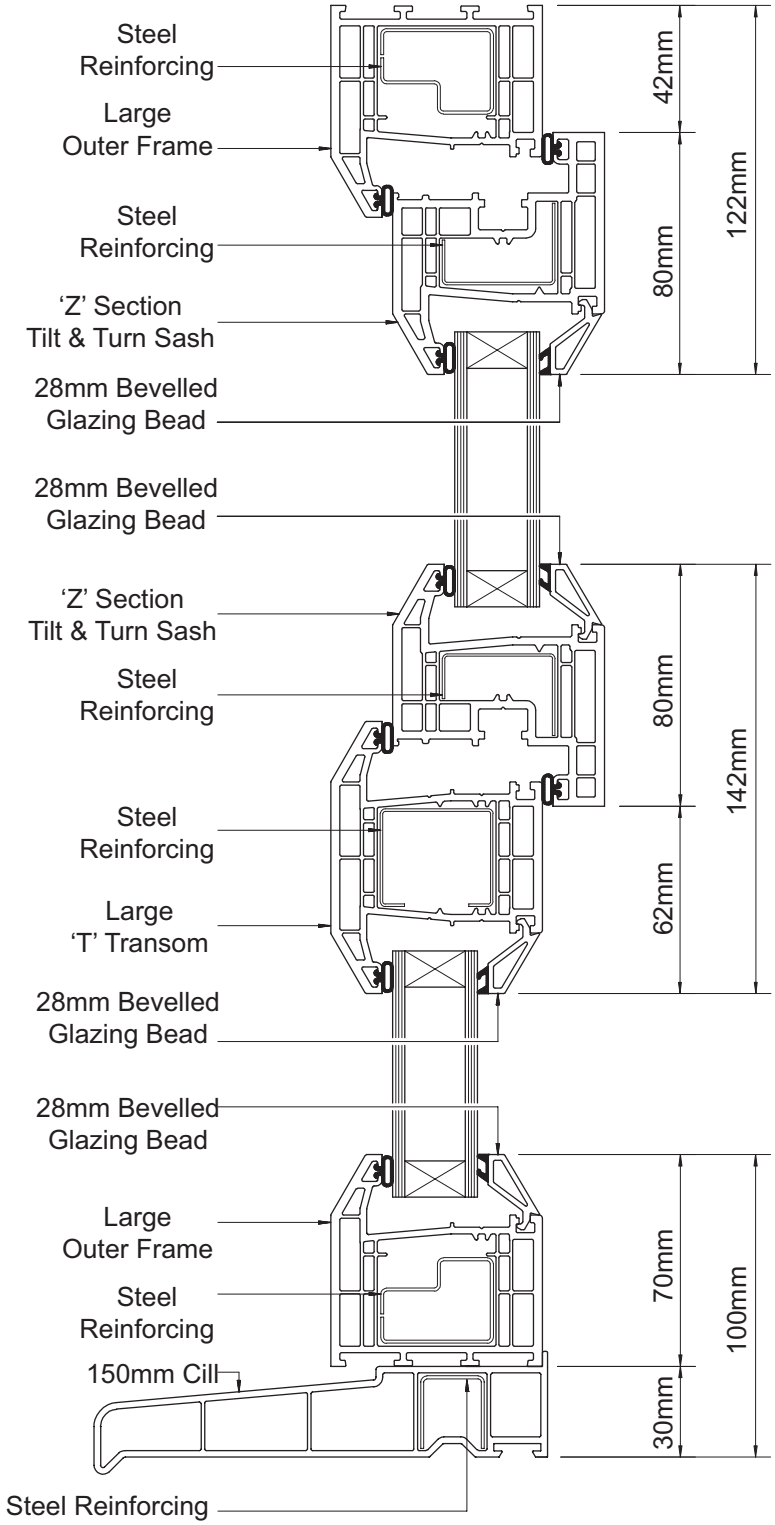

Note : All reinforcements shown are for diagramatical purposes only. For application, see pages Int.7 & Gen.5

spectus *n.* look, appearance, aspect
www.spectus.co.uk





Spectus WINDOW SYSTEMS

ELITE 70 - GENERAL ASSEMBLIES

TILT & TURN WINDOW (OVOLO)

TYPICAL OPEN-IN TILT & TURN WINDOW

SPECIFICATION

Large Outer Frame
Intermediate 'T' Transom
'Z' Section Tilt & Turn Sash
24mm Ovolo Glazing Bead
85mm Cill
Steel Reinforcing

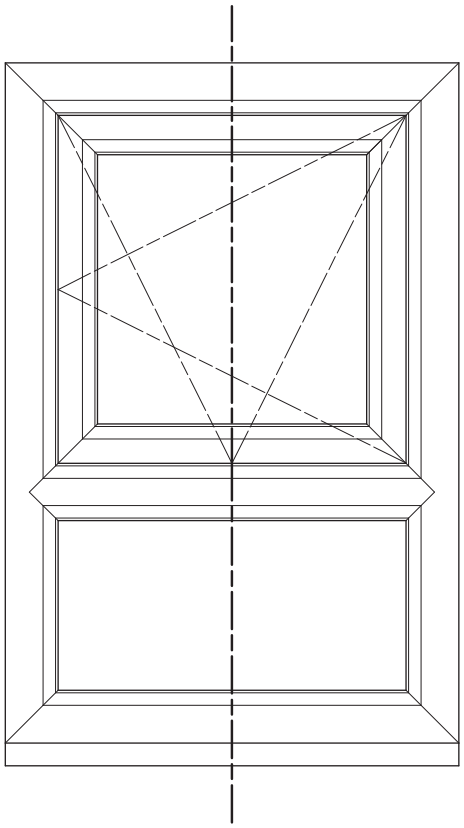

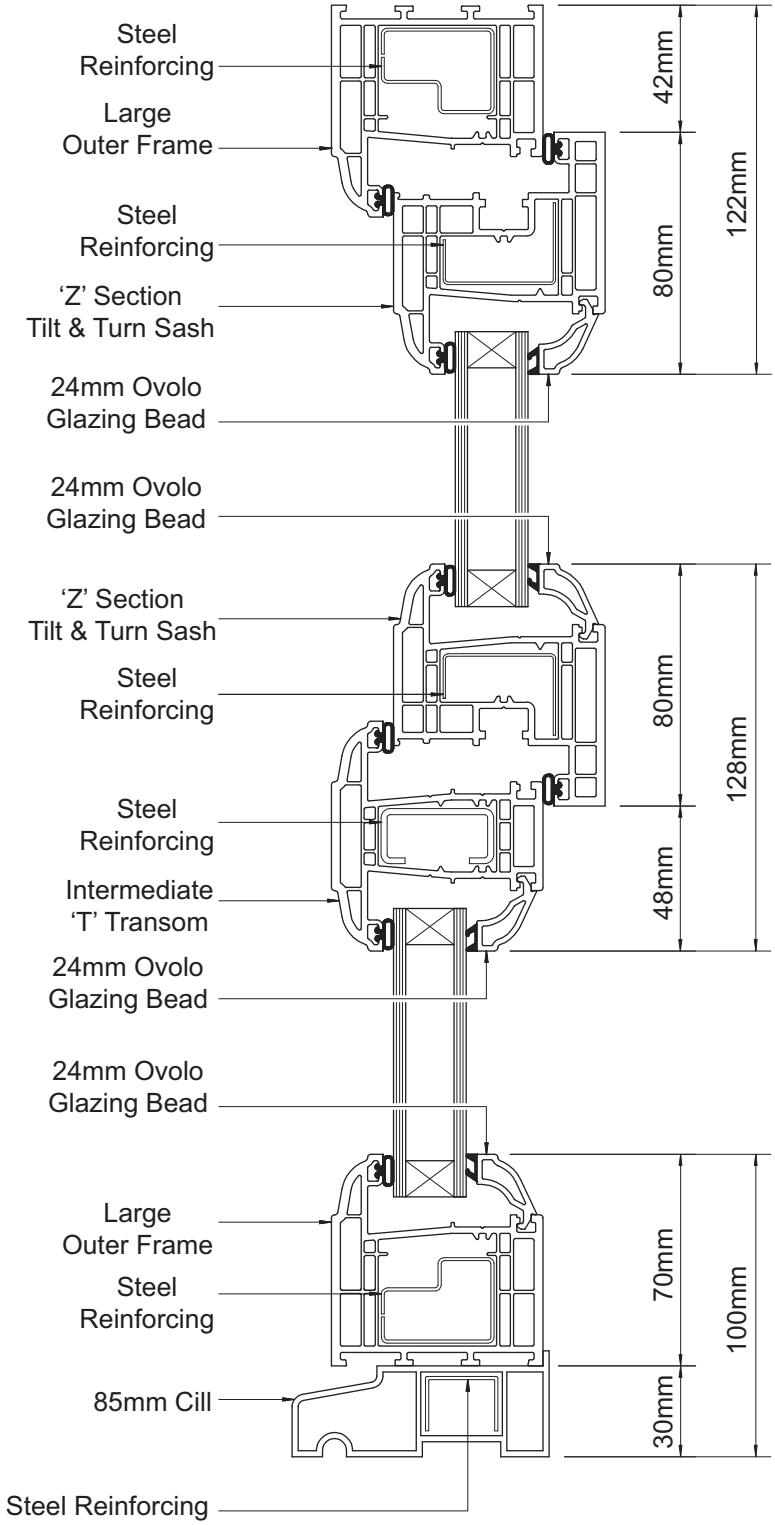

Note : All reinforcements shown are for diagramatical purposes only. For application, see pages Int.7 & Gen.5

spectus *n.* look, appearance, aspect
www.spectus.co.uk



Spectus WINDOW SYSTEMS

ELITE 70 - GENERAL ASSEMBLIES

RESIDENTIAL DOOR (BEVELLED)

TYPICAL OPEN-IN RESIDENTIAL DOOR

SPECIFICATION

Large Outer Frame
'Z' Section Door Sash
'T' Section Midrail
28mm Bevelled Glazing Bead
Aluminium Low Threshold
Steel Reinforcing

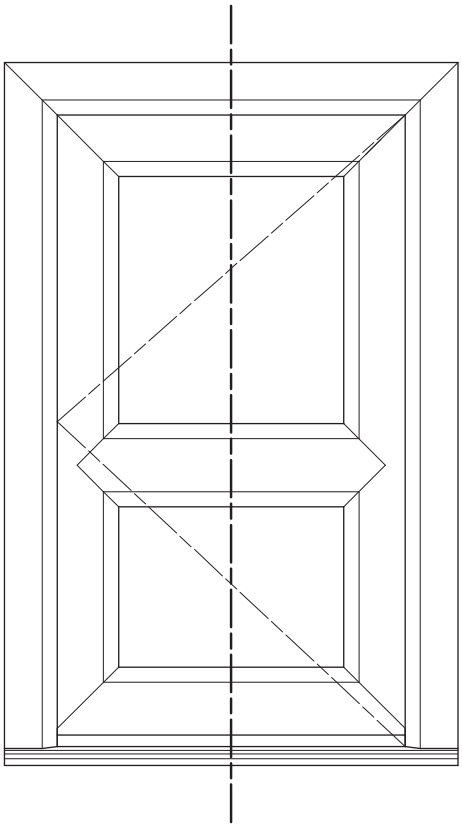

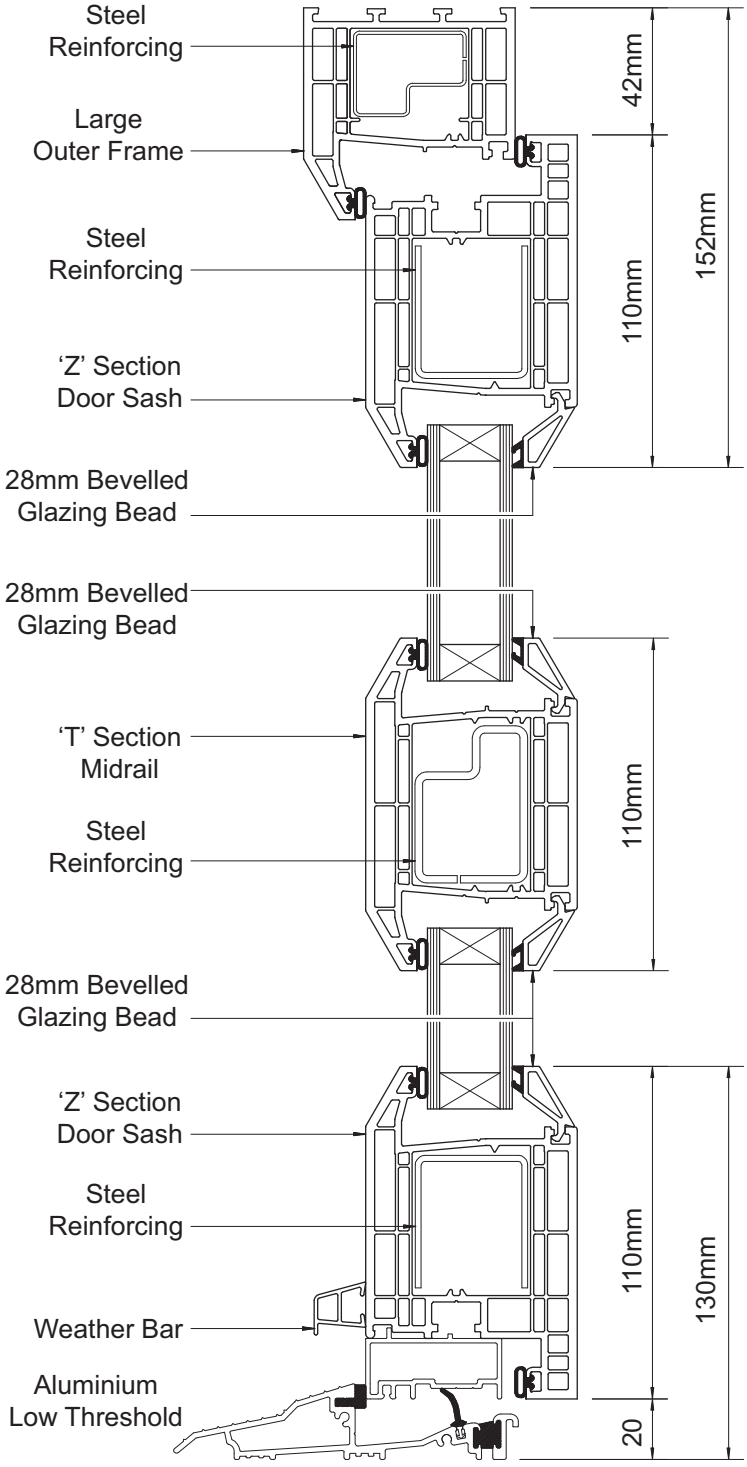

Note : All reinforcements shown are for diagramatical purposes only. For application, see pages Int.7 & Gen.5

spectus *n.* look, appearance, aspect
www.spectus.co.uk





Spectus WINDOW SYSTEMS

ELITE 70 - GENERAL ASSEMBLIES

RESIDENTIAL DOOR (OVOLO)

TYPICAL OPEN-IN RESIDENTIAL DOOR

SPECIFICATION

Large Outer Frame
'Z' Section Door Sash
'T' Section Midrail
28mm Ovolo Glazing Bead
Aluminium Low Threshold
Steel Reinforcing

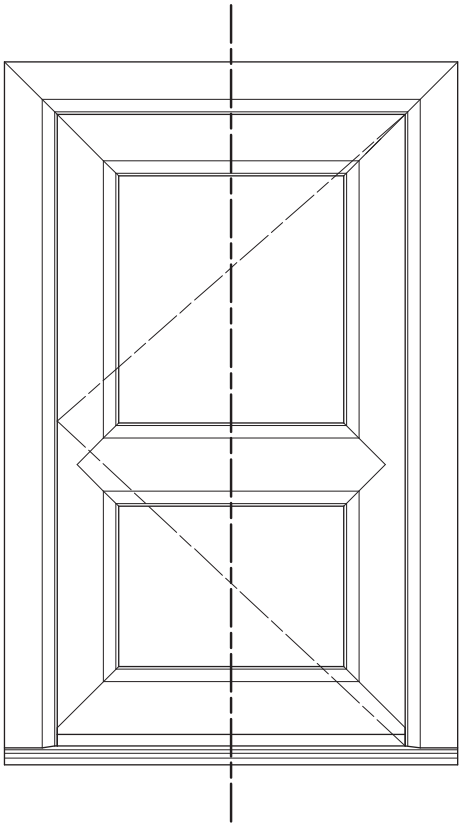

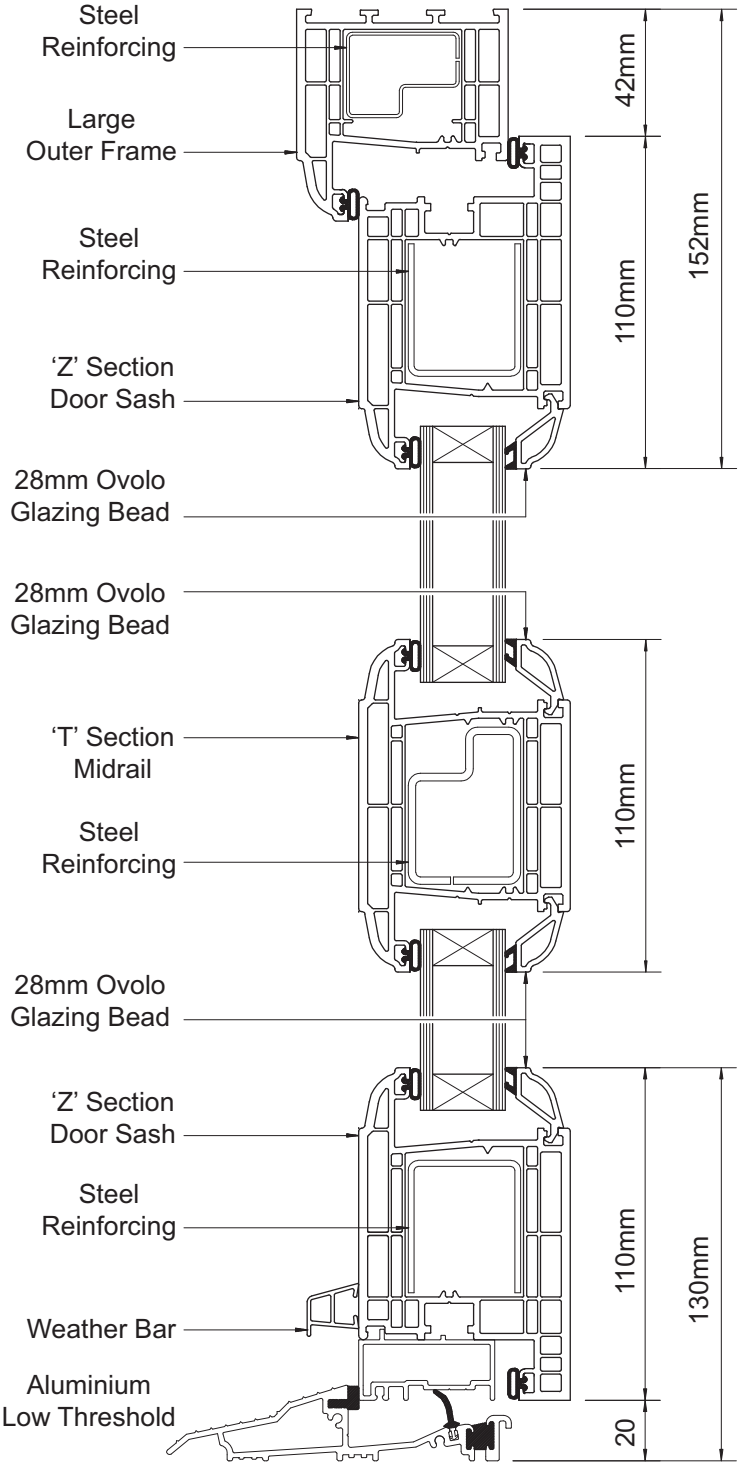

Note : All reinforcements shown are for diagramatical purposes only. For application, see pages Int.7 & Gen.5

spectus *n.* look, appearance, aspect
www.spectus.co.uk



Spectus WINDOW SYSTEMS

ELITE 70 - GENERAL ASSEMBLIES

RESIDENTIAL DOOR (BEVELLED)

TYPICAL OPEN-OUT RESIDENTIAL DOOR

SPECIFICATION

Large Outer Frame
'T' Section Door Sash
28mm Bevelled Glazing Bead
150mm Cill
Steel Reinforcing

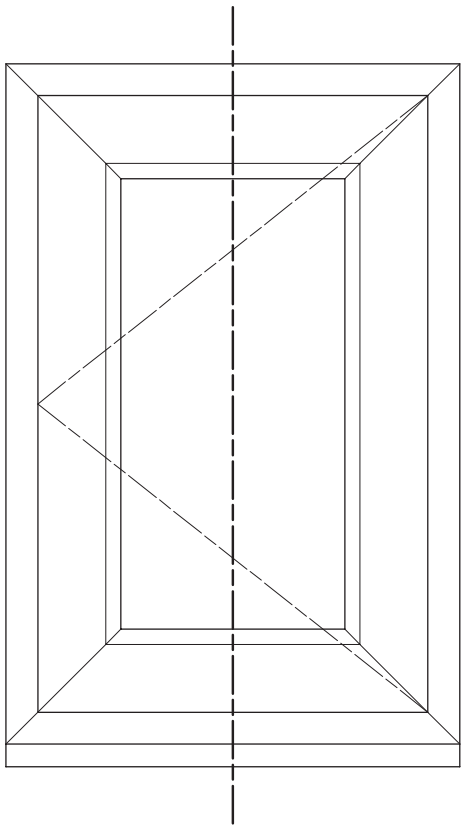

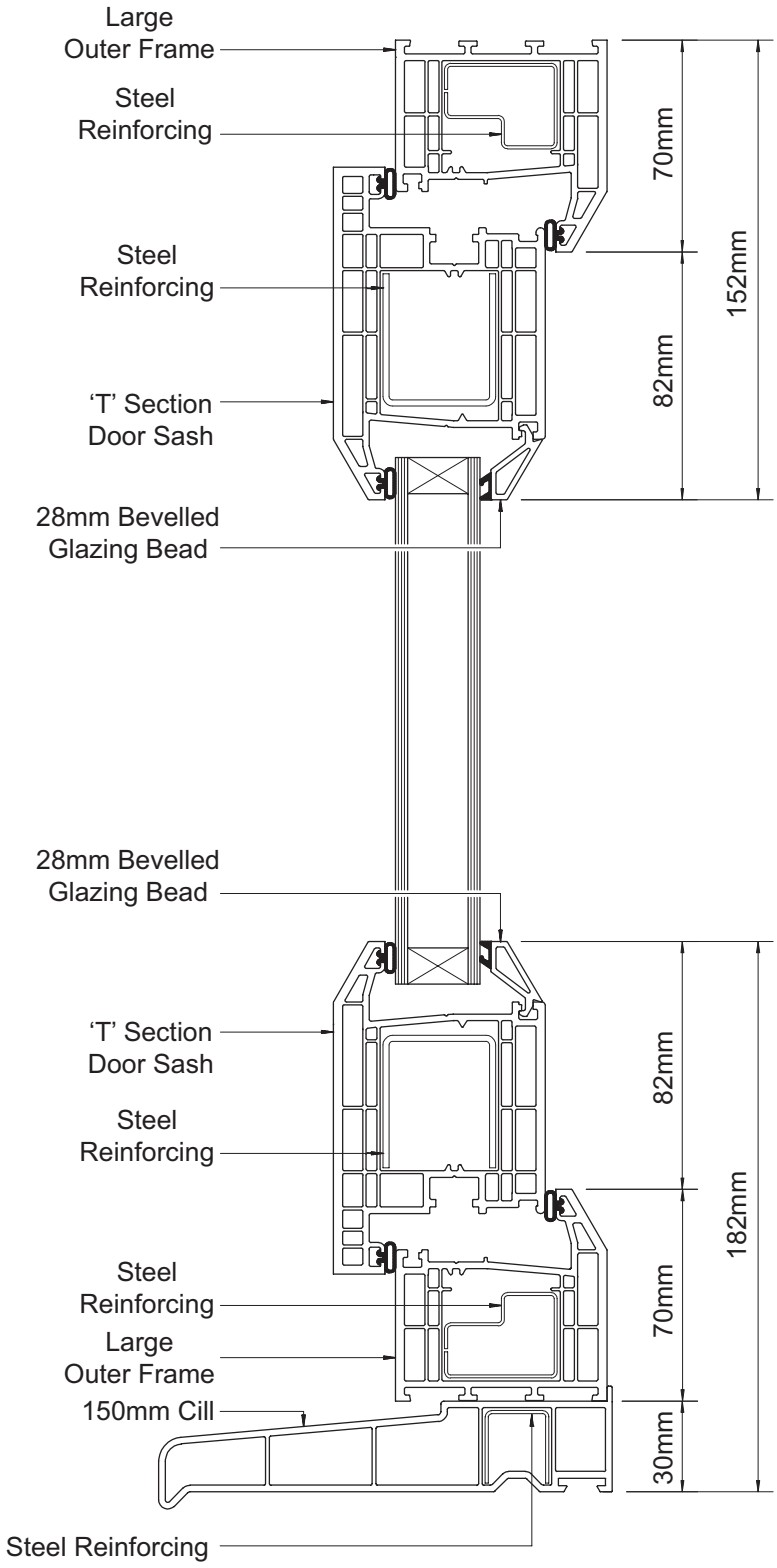

Note : All reinforcements shown are for diagramatical purposes only. For application, see pages Int.7 & Gen.5

spectus *n.* look, appearance, aspect
www.spectus.co.uk





Spectus WINDOW SYSTEMS

ELITE 70 - GENERAL ASSEMBLIES

RESIDENTIAL DOOR (OVOLO)

TYPICAL OPEN-OUT RESIDENTIAL DOOR

SPECIFICATION

Large Outer Frame
'T' Section Door Sash
28mm Ovolo Glazing Bead
150mm Cill
Aluminium Reinforcing

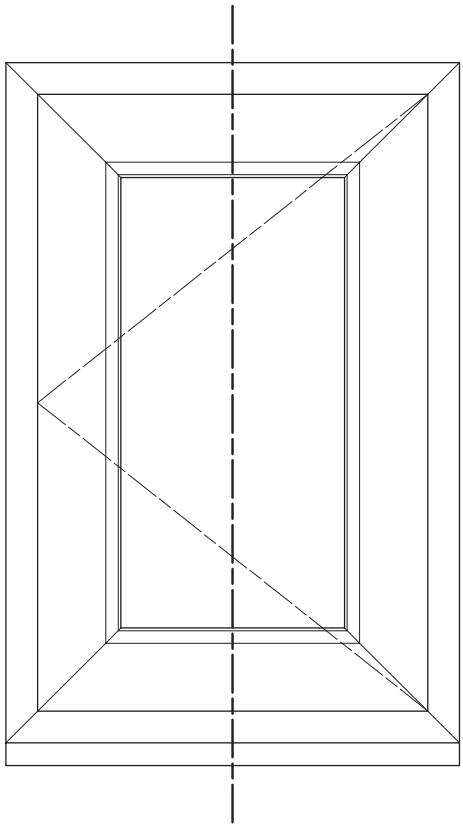

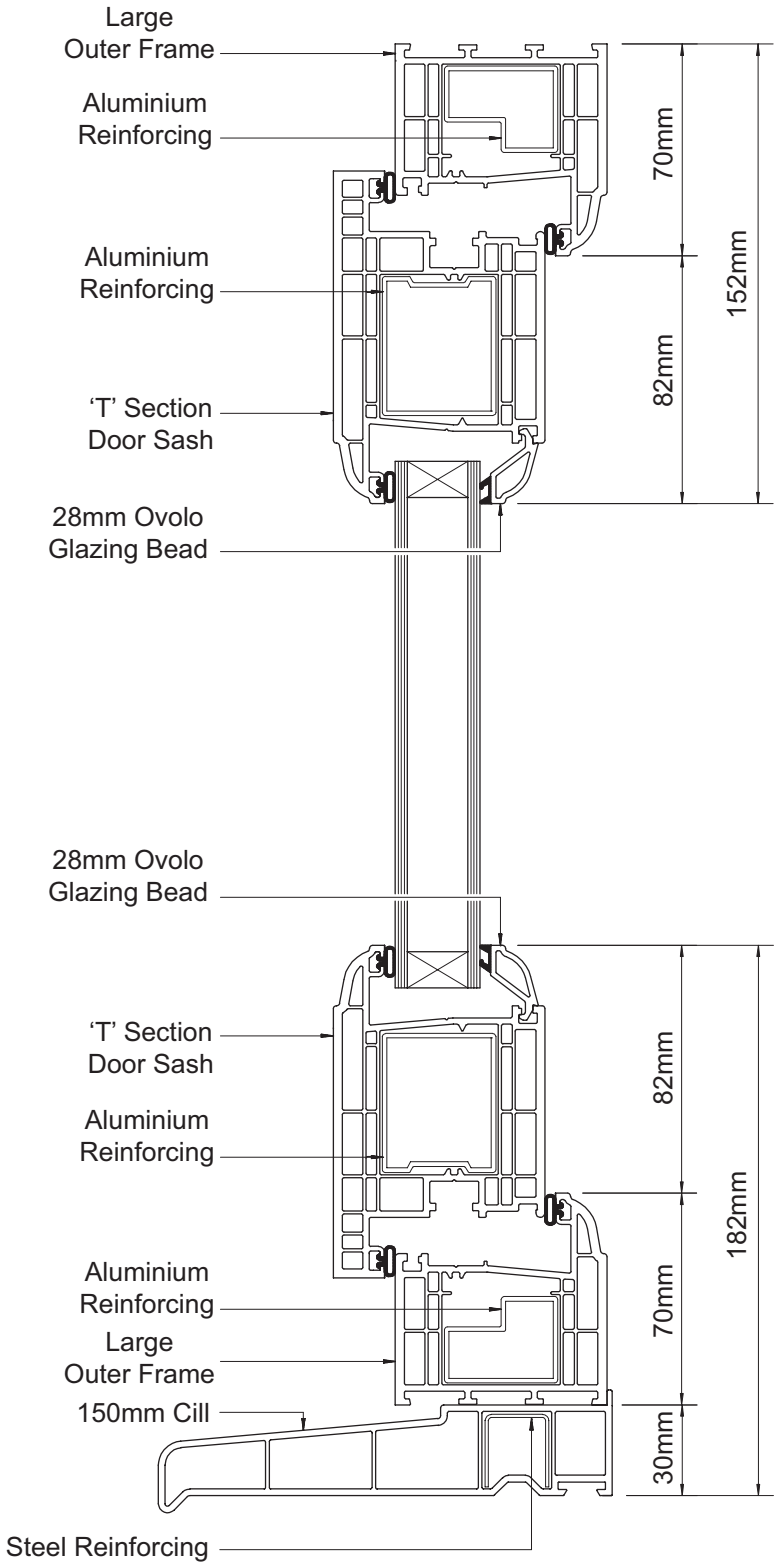

Note : All reinforcements shown are for diagramatical purposes only. For application, see pages Int.7 & Gen.5

spectus *n.* look, appearance, aspect
www.spectus.co.uk



Spectus WINDOW SYSTEMS

ELITE 70 - GENERAL ASSEMBLIES

FRENCH DOORS (BEVELLED)

TYPICAL OPEN-OUT FRENCH DOORS

SPECIFICATION

Large Outer Frame
'T' Section Door Sash
Slim 'T' Meeting Rail
28mm Bevelled Glazing Bead
Steel/Aluminium Reinforcing

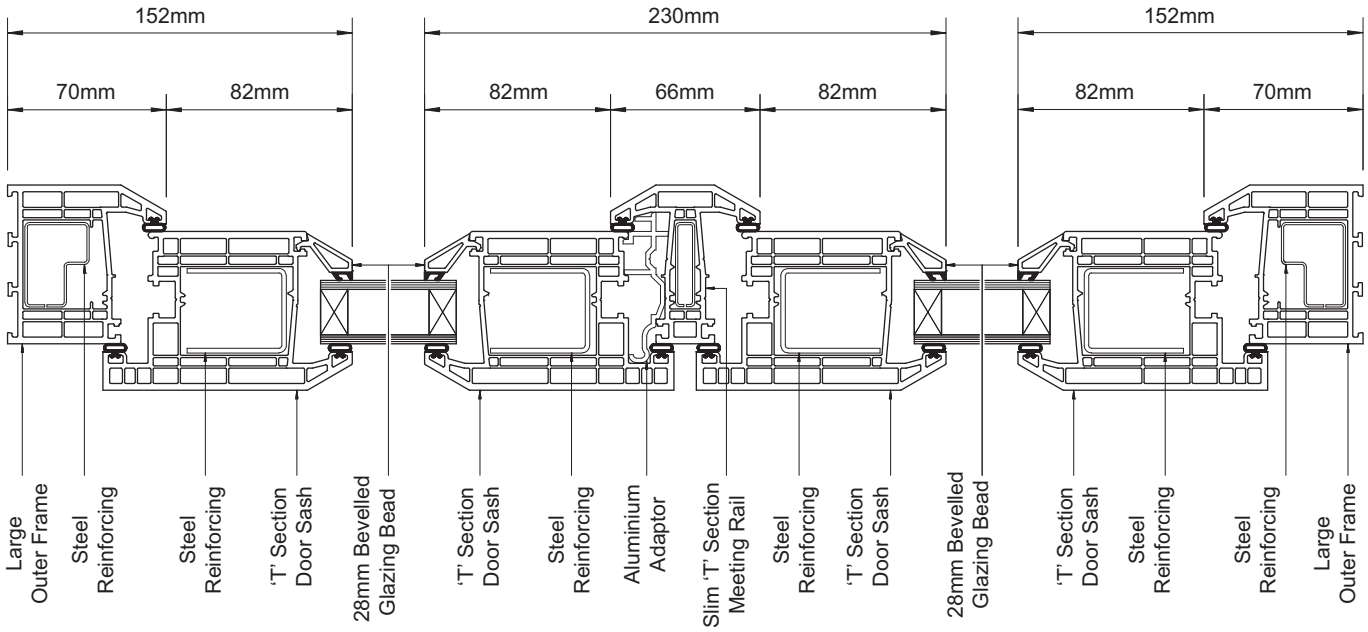

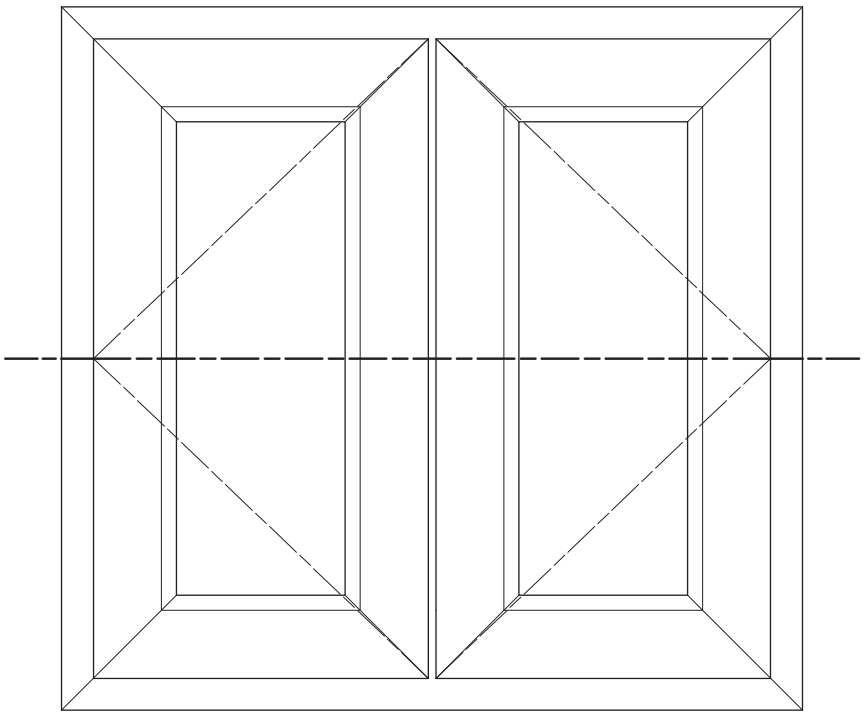

Note : All reinforcements shown are for diagramatical purposes only. For application, see pages Int.7 & Gen.5

spectus *n.* look, appearance, aspect
www.spectus.co.uk





Spectus WINDOW SYSTEMS

ELITE 70 - GENERAL ASSEMBLIES

FRENCH DOORS (OVOLO)

TYPICAL OPEN-OUT FRENCH DOORS

SPECIFICATION

Large Outer Frame
'T' Section Door Sash
Slim 'T' Meeting Rail
28mm Ovolo Glazing Bead
Steel/Aluminium Reinforcing

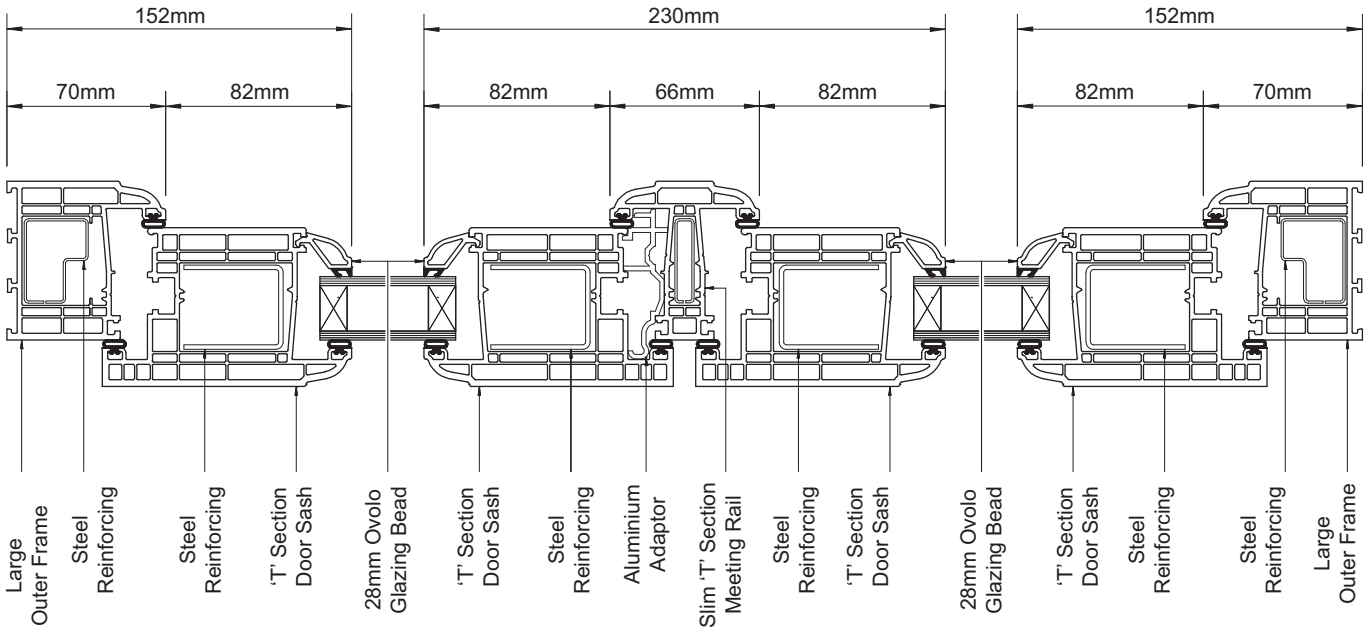

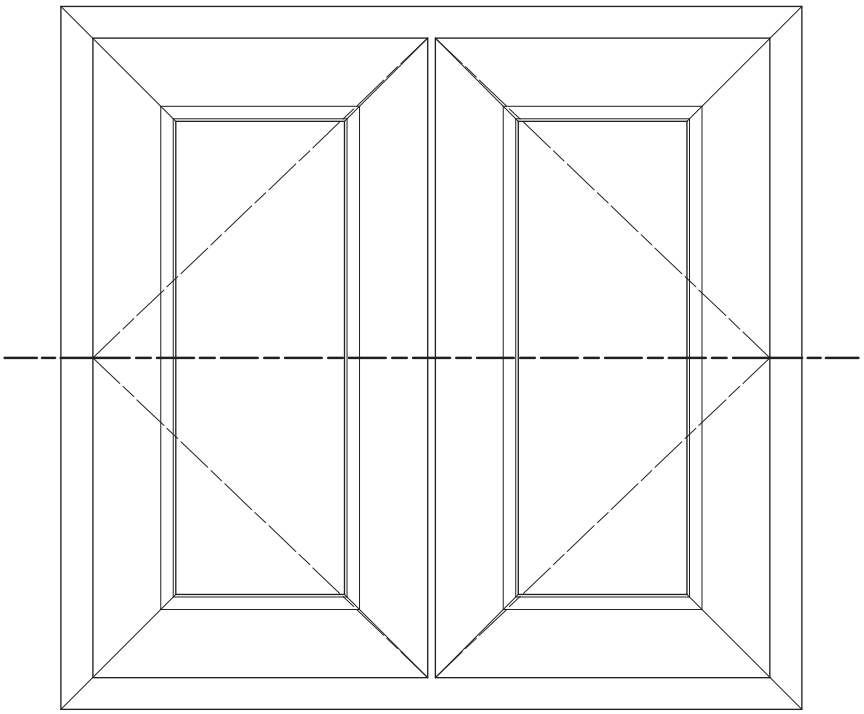

Note : All reinforcements shown are for diagramatical purposes only. For application, see pages Int.7 & Gen.5

spectus *n.* look, appearance, aspect
www.spectus.co.uk





Spectus
WINDOW SYSTEMS

ELITE 70 - GENERAL ASSEMBLIES

BI-FOLDING DOORS (BEVELLED)

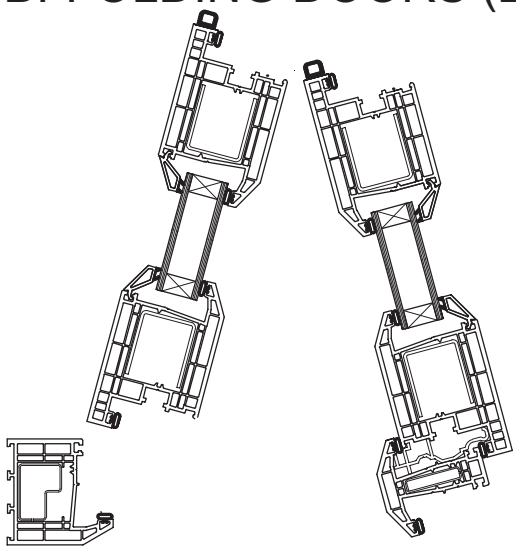

TYPICAL OPEN-IN BI-FOLDING DOORS

SPECIFICATION

3 Bi-Folding Doors
Large Outer Frame
'Z' Section Door Sash
'T' Section Door Sash
Slim 'T' Meeting Rail
28mm Bevelled Glazing Bead
Steel/Aluminium Reinforcing

NOTE :- Bi-Folding Doors are available in 3, 4, 5, 6 & 7 door options in various configurations

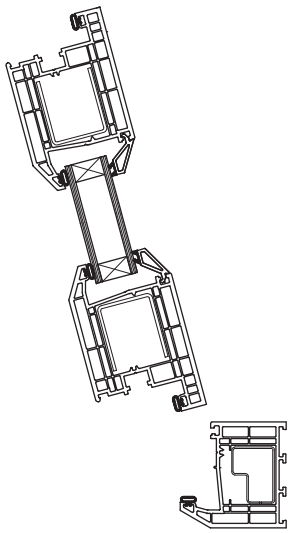

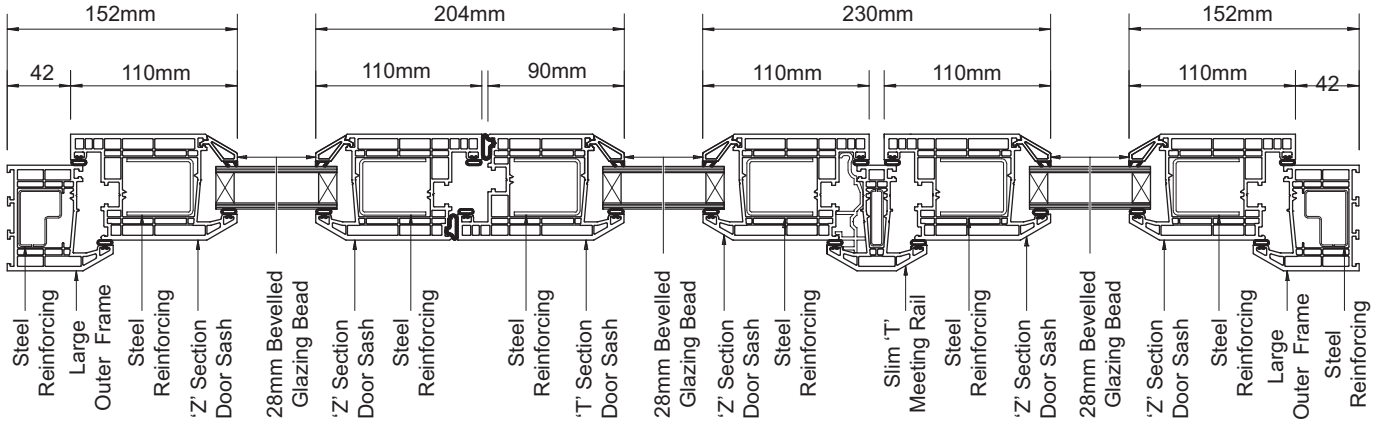

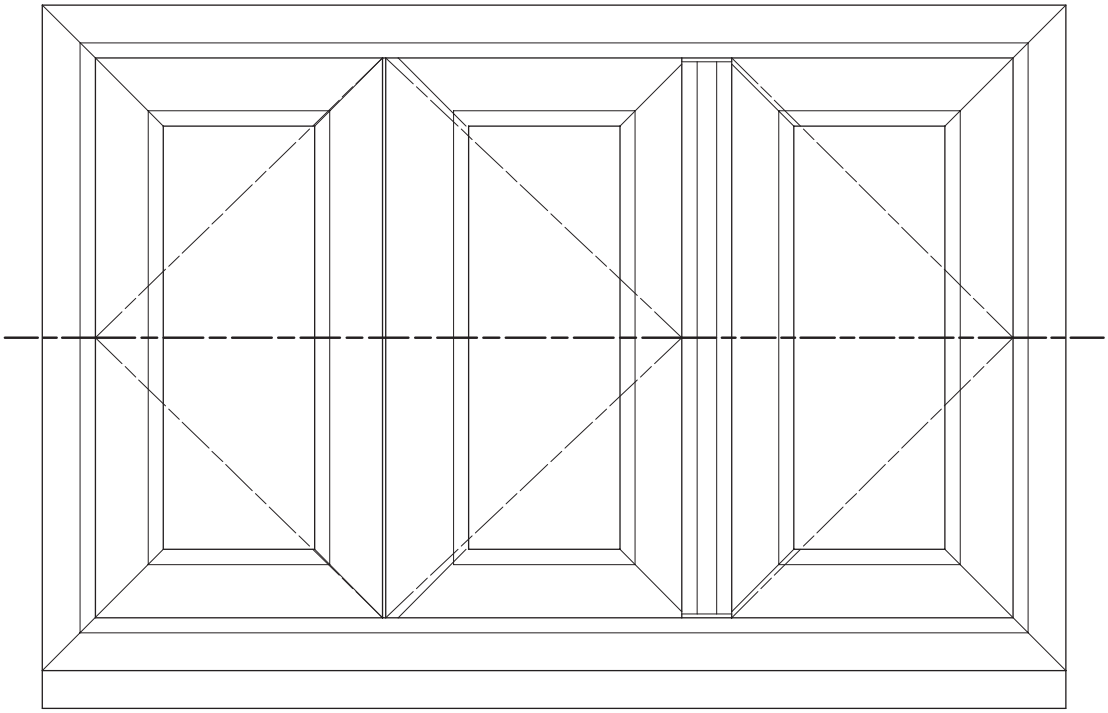

Note : All reinforcements shown are for diagramatical purposes only. For application, see pages Int.7 & Gen.5

spectus *n.* look, appearance, aspect
www.spectus.co.uk





Spectus WINDOW SYSTEMS

ELITE 70 - GENERAL ASSEMBLIES

BI-FOLDING DOORS (OVOLO)

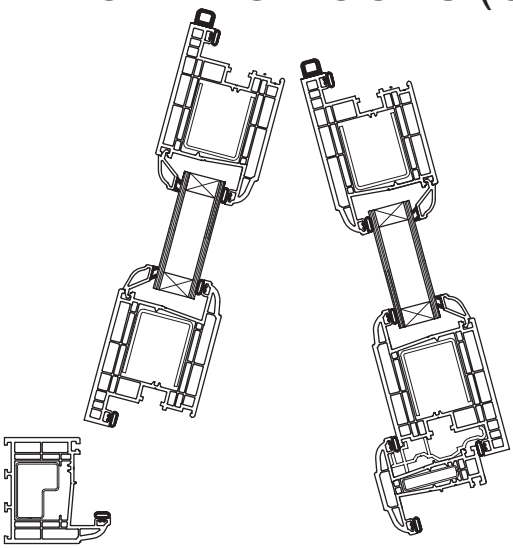

TYPICAL OPEN-IN BI-FOLDING DOORS

SPECIFICATION

3 Bi-Folding Doors
Large Outer Frame
'Z' Section Door Sash
'T' Section Door Sash
Slim 'T' Meeting Rail
28mm Ovolo Glazing Bead
Steel/Aluminium Reinforcing

NOTE :- Bi-Folding Doors are available in 3, 4, 5, 6 & 7 door options in various configurations

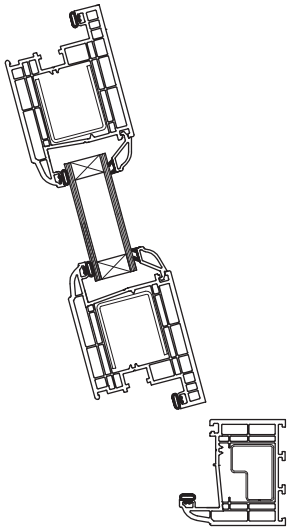

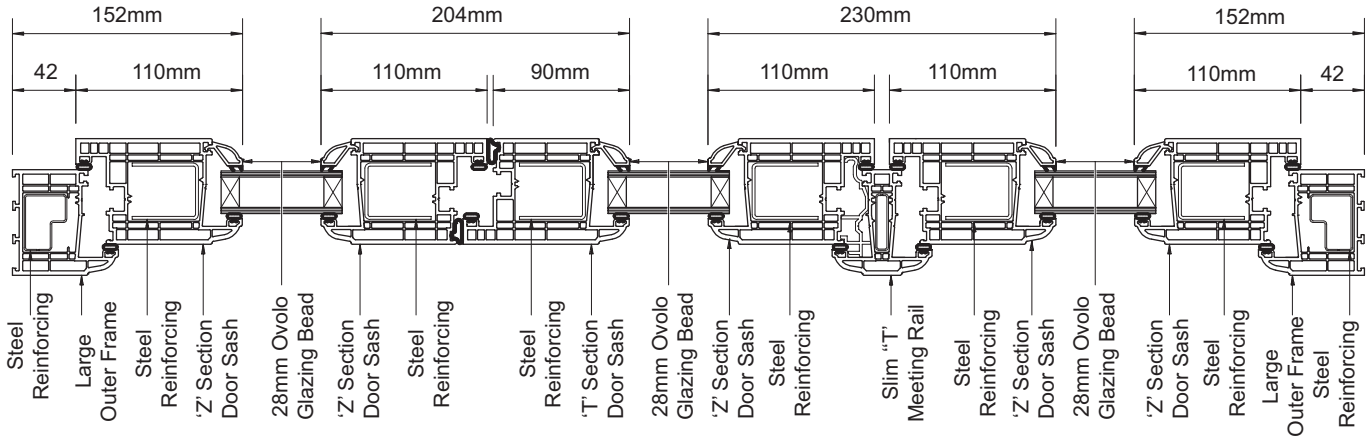

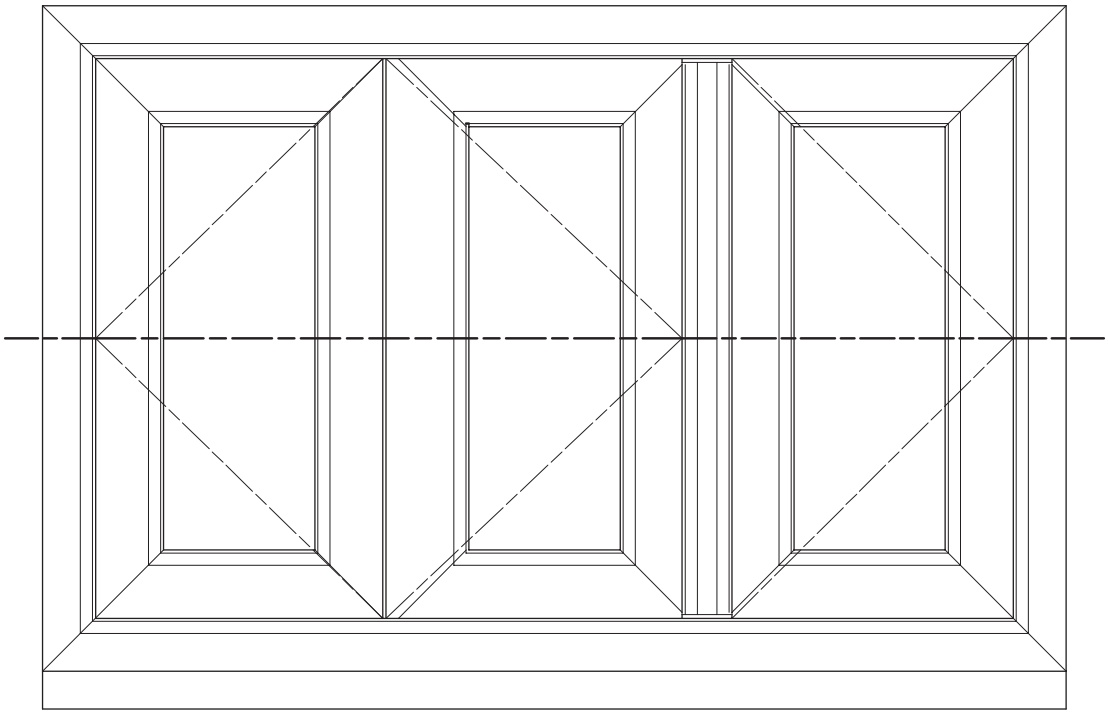

Note : All reinforcements shown are for diagramatical purposes only. For application, see pages Int.7 & Gen.5

spectus *n.* look, appearance, aspect
www.spectus.co.uk