Order Acknowledgement

JADE Window & Door Specialists

Jade Windows
622
Bradford Road
Batley
West Yorkshire
WF17 8HF
Tel: 01924 438 277 Fax:

Customer & Order Information

ARCHED WINDOW EXAMPLE

Tel :
Fax :

Job No :	10022022 ARCH
Production Date :	
Delivery Date :	
Processed Date :	10-Feb-2022
Printed Date :	10-Feb-2022
Order Date :	10-Feb-2022

Job Spec
Glazed / Supply Only (Delivered

Job Reference :

1 Elite 70 Bevelled Casement
O/A Sizes 1205mm x 1835 / 1250mm (155)

ARCHED WINDOW EXAMPLE

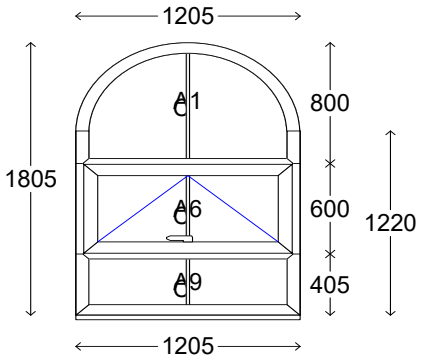

32.41 kg : 71.46 lb

Specification		Chk			Chk
Frame (Head)	B03 70mm Frame	[ ]	Frame (Cill)	B03 70mm Frame	[ ]
Frame (Left jamb)	B03 70mm Frame	[ ]	Frame (Right jamb)	B03 70mm Frame	[ ]
Transom	B10/11 66mm T/Z Section	[ ]	Sash (Head)	B30/31 75mm T/Z Sash	[ ]
Sash (Cill)	B30/31 75mm T/Z Sash	[ ]	Sash (Left jamb)	B30/31 75mm T/Z Sash	[ ]
Sash (Right jamb)	B30/31 75mm T/Z Sash	[ ]	Cill	C150 150mm Classic Nose Cill	[ ]
Add-on (Cill)	No add-on	[ ]	Ventilator (Sash)	No ventilator	[ ]
Ventilator (Glass)	No ventilator	[ ]	Ventilator (Frame)	No ventilator	[ ]
Colour	White	[ ]	Sash colour	White	[ ]
Cill colour	White	[ ]	Drainage	Concealed/Base	[ ]
Georgian cruciform jo	Mullions run through	[ ]	Bead type	B62 Ovolo Step Bead	[ ]
Handle	White Espag Handle	[ ]	Casement locking	Mushroom espag	[ ]
Friction stay	Std stay	[ ]	Restrictor	None	[ ]
Viewed from	Viewed from outside	[ ]	Open in/out	Open out	[ ]
Glazed in/out	Glazed in	[ ]	Reinforcing rule	Normal Reinforcing	[ ]
Reinforcing type	Steel Reinforcing	[ ]	Tran/Mull joints	Welded joint	[ ]

Glazing Details & Apertures

Cut-templ 4-20-4 Clear s/c : 20mm Thermal Spacer Single Geo Bar (V) 18mm Bar White Std Joints Argon Gas Filled
A1 - (1093 x 725)

4-20-4 Clear s/c : 20mm Thermal Spacer Single Geo Bar (V) 18mm Bar White Std Joints Argon Gas Filled
A6 - (999 x 468) A9 - (1093 x 330)

Continued ....