

Tree Schedule			
Tree Number	Species	RPA Radius	Category
1T	Ash	2.4m	U
2T	Sycamore	15m	B2
3G	Apple x 1, plum x 2, sycamore x 1		C2
4T	Ash	3.6m	U
5T	Goat willow	8.1m	B2
6T	Sycamore	6.8m	U
7G	3 x sycamore, 1 x elder		C2
8G	2 x sycamore		C2
9T	Silver birch	0.9m	C2
10T	Sycamore	6.8m	C2
11T	Sycamore	2.1m	C2
12T	Sycamore	2.7m	C2
13G	Sycamore		A2
14T	Ash	9.3m	U
15G	Ash, sycamore,		C3
16G	4 x sycamore		B2
17G	1 x sycamore, 1 x ash		C2
18G	Sycamore, elder, oak		C3
19T	Hawthorn	8.1m	B2
20T	Sycamore	6m	B2
21T	Sycamore	3m	C2
22G	Sycamore		C2
23T	Sessile oak	1.2m	C2
24T	Sessile oak	2.4m	C2
25G	Sycamore, ash, elder, hawthorn		C2
26G	2 x hawthorn		B3
27G	Ash		U
28T	Hawthorn	2.7m	C2
29H	Mixed species		C3
30T	Silver birch	5.4m	B2
31G	Laburnum, larch and Holly		B2
32G	Sycamore, beech		B2
33G	5 x sycamore		B2
34T	Sycamore	9.9m	B2
35T	Sycamore	2.9m	C2
36G	Ash and sycamore		A2

BS 5837 (2012) Tree Protection Fencing

TREE PROTECTION FENCING MUST BE PLACED ACCURATELY AND SCALED FROM DRAWING RELATIVE TO TRUNK POSITIONS

NOTES

1. STANDARD SCAFFOLD POLES.
2. HEAVY GAUGE 2 M TALL GALVANIZED TUBE AND WELDED MESH INFILL PANELS.
3. PANELS SECURED TO UPRIGHTS AND CROSS-MEMBERS WITH WIRE TIES.
4. GROUND LEVEL.
5. UPRIGHTS DRIVEN INTO THE GROUND UNTIL SECURE (MINIMUM DEPTH 0.6 M).
6. STANDARD SCAFFOLD CLAMPS.

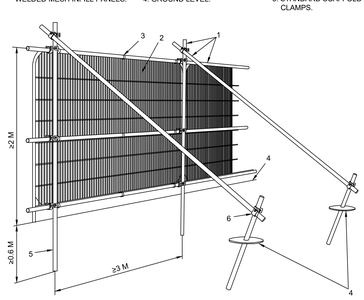

THIS DRAWING MUST BE VIEWED IN COLOUR AND READ IN CONJUNCTION WITH ARBORICULTURAL IMPACT ASSESSMENT AND METHOD STATEMENT

KEY

- ROOT PROTECTION AREAS
- TREES/VEGETATION TO BE RETAINED
- TREES/VEGETATION TO BE REMOVED
- TREES/GROUPS TO BE PRUNED/REDUCED BACK
- TREE PROTECTION FENCING
- CONSTRUCTION EXCLUSION ZONES

Phase	Requirements	Method
1 Prior to erection of protective fencing.	Undertake tree and vegetation removal and pruning works **Trees/vegetation to be removed:** **Trees/vegetation to be pruned:**	**Refer to section 5.5 of AIA/MS report.** All tree works to be carried out to BS3998: 2010: by suitably qualified and insured professional tree surgeons. **The following tree felling must be undertaken at this Phase:** **Items requiring removal:** 1T Ash 3G Apple x 1, plum x 2, sycamore x 1 8G 2 x sycamore 9T Silver birch 14T Ash 15G Ash, sycamore, 17G 1 x sycamore, 1 x ash 18G Sycamore, elder, oak 19T Hawthorn 20T Sycamore 21T Sycamore 22G Sycamore 23T Sessile oak 24T Sessile oak 25G Sycamore, ash, elder, hawthorn 26G 2 x hawthorn 27G Ash 28T Hawthorn 35T Sycamore **The following tree pruning must be undertaken at this Phase:** **Items requiring pruning:** **5T** Goat Willow. Reduce the southerly lateral canopy spread to the south back by approximately 1.5m in length and blend into remaining canopy. Crown lift all around to 2m above ground level. **16G** 4 x sycamore. Reduce the southerly lateral canopy spread to the south back by approximately 2.5m in length and blend into remaining canopy. **31G** Laburnum, larch and holly. Reduce back the northerly lateral canopy spread by approximately 1m. Access to the trees may be required in order to undertake these works. This would require the consent and co-operation of the neighbouring tree owners. **32G** Sycamore, Beech. Reduce back the northerly lateral canopy spread by approximately 7m. Access to the trees may be required in order to undertake these works. This would require the consent and co-operation of the neighbouring tree owners. **33G** 5x Sycamore. Reduce back the northerly lateral canopy spread by approximately 4m. Access to the trees may be required in order to undertake these works. This would require the consent and co-operation of the neighbouring tree owners. **34T** Sycamore. Reduce back the northerly lateral canopy spread by approximately 1.5m. **36G** Ash and sycamore. Reduce back the easterly lateral canopy spread by approximately 2.5m. Access to the trees may be required in order to undertake these works. This would require the consent and co-operation of the neighbouring tree owners.

Phase	Requirements	Method
2 Prior to any construction works on site	Erection of protective fencing: To retain throughout the duration of the development:	Protective fencing is to be erected in accordance with 5.6 of AIA/MS report. The fencing **must** comply with the positions shown in the Tree Protection Plan. A scale copy of the Tree Protection Plan must be used as reference and fencing positions measured from the Plan using a scale rule and/or using the provided distances where shown. No works, no storage of materials, no access, or any ground disturbance is to take place within the Tree Protection Barrier Fencing other than works specified within the Arboricultural Method Statement. **Fenced areas are to be treated as Construction Exclusion Zones.** Warning signs to be placed on all protective fencing. For large sections of fencing the signs must be placed at 20m intervals. Signs must be laminated and securely attached at all corners. Two signs are to be placed side by side; copies of which are attached within **Appendix A**.
3 Verifying quality of protective barriers	Verify that the location and quality of tree protection barriers is adequate prior to onset of main site works.	Site visit with Arboricultural Consultant and Site Manager. Tree Officer to be pre-informed of visit. In order for set works to proceed the pro-forma in **Appendix B**. of the AIA/AMS report is to be completed and passed on to the local planning authority: **If the protective barriers are not adequately, work is not to proceed until rectified.**
4 Ongoing	Maintain protective fencing	The tree protective barrier fencing is to remain in situ during all construction works.
5 Completion of main construction and undertaking of landscaping	Landscaping and Dismantling of tree barrier protective fencing.	It is essential that ground levels within the root protection areas are not altered, either by raising or lowering soil levels; even at the landscaping stage. Landscaping operations must be undertaken in a manner that will not impact trees. Landscaping within the root protection area of trees must be undertaken in the following manner: 1. Any existing ground flora (grass/weeds/scrub) is to be sprayed with a systemic herbicide and left to die-off. 2. Dead flora is to be strimmed as hard as possible with a brush cutter or similar. The bulk of the strimmed material is to be removed by raking. 3. A good quality organic topsoil layer may be placed down. Small depressions may be filled (and **lightly** compacted underfoot). Placed topsoil soil layers **must not exceed** 100mm depth. 4. No plant machinery operating within the root protection areas to exceed 1 tonne gross weight and must only operate from propriety ground protection boards such as DuraMatt Access Matts (see **Appendix C**). 5. Turf and other planting to proceed thereafter.

No dimension to be scaled from this drawing
©Copyright reserved

	Date	Drwn	Rev

tba
Landscape Architecture
Arboriculture

Trevor Bridge Associates Ltd
Ashton Old Baths
Stamford Street West
Ashton-under-Lyne
Lancs OL6 7FW

Tel: 0161-804 2099
E-mail: info@trevorbridge.co.uk

Project
Burn Road, Huddersfield

Wiggett

Title
Tree Protection Plan

Date	Scale(s)	Dwg no	Rev
MAR 21	1:200 @ A0	6724.02	

Dwn	Chkd
MD	MG