Burn Road
Huddersfield

Wiggett Construction Limited

ARBORICULTURAL IMPACT ASSESSMENT
AND
METHOD STATEMENT
(Revision C)

tba
landscape architects

Landscape Architecture
Arboriculture

Ashton Old Baths
Stamford Street West
Ashton-under-Lyne
Lancashire
OL6 7FW

Tel: 0161 8042099

Email: info@trevorbridge.co.uk
www.trevorbridge.co.uk

© Copyright reserved Trevor Bridge Associates Limited 2022
The contents of this document must not be copied
in whole or in part without the written consent of
Trevor Bridge Associates Limited

March 2022
Revised July 2022
Revised January 2023
Revised May 2023

Ref: MG/6724/AIA&AMS/REV C/MAY23

Contents

1.0 Introduction

2.0 Arboricultural Impact Assessment

3.0 The Arboricultural Impact Table – Key

3.2 Arboricultural Impact Table – Cascade Chart
3.3 Arboricultural Impact Table – Results

4.0 General Issues

5.0 Arboricultural Method Statement

6.0 Method Statement Schedule

APPENDIX A - SIGNS TO ATTACH TO PROTECTIVE BARRIER FENCING

APPENDIX B – SITE INSPECTION PRO-FORMA

APPENDIX C – GROUND PROTECTION BOARDS

1.0 Introduction

1.1 This document has been prepared by Trevor Bridge Associates on the behalf of Wiggett Construction Limited. It provides an Arboricultural Impact Assessment (AIA) and Arboricultural Method Statement (AMS) in regard to the following proposed development.

- Construction of 22 dwellings with related infrastructure.

1.2 This document follows, and should be read in conjunction with, a pre-development tree survey that was undertaken by TBA Ltd in September 2021 and revised in December 2022 & January 2023 (ref*: PD/6724/TSR/REV C/JAN23*).

1.3 For the purposes of preparing this document the following material was referenced:

- HNA architects drawing: ***Proposed Site Layout (Trees). Drawing. No. 1354/P/001. Rev. T. Date: 26.10.2021.***

1.4 This report assesses the potential impacts to trees as a consequence of the development proposals, as well as specifying the necessary methodologies required during construction to ensure that trees being retained are afforded adequate protection from harm.

1.5 Accompanying this report is the following drawing which must be read in conjunction with this report:

- ***TBA Drawing: Tree Protection Plan. Drawing No. 6724.02. Revision C. Date started: March 2022.***

2.0 Arboricultural Impact Assessment

2.1 The consequences on existing trees situated within and adjacent the proposed development site are considered.

2.2 The value of the trees and vegetation surveyed

In the initial tree survey report a total of 50 items were surveyed within and adjacent the development site. These items comprised 33 individual trees, 16 groups, and a single hedge. The chart and table below show the ratio of tree retention categories on the site and number of items (be it groups or individuals etc that were surveyed).

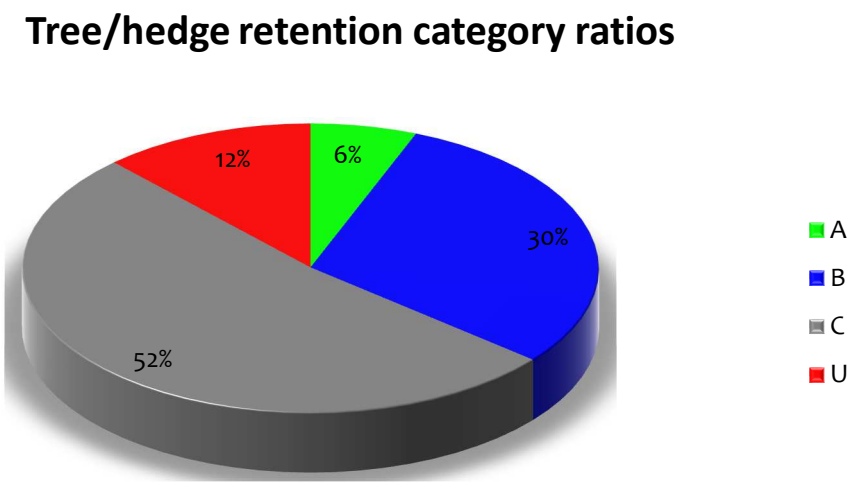

Retention Category	No.
A (High Value)	3
B (Moderate value)	17
C (Low value)	26
U (Remove)	4

3.0 Arboricultural Impact Table - Key

3.1 The Arboricultural Impact Table (section 3.3) lists all items surveyed within the site. The tree data is taken from the initial tree survey report. The table is colour coded for ease of reference, particularly in relation to the value of trees and the potential impact that may occur to them:

Tree Values

High	High value tree / group / hedge as included within the initial tree survey
B (Moderate)	Moderate value tree / group / hedge as included within the initial tree survey
C (Low)	Low value tree / group / hedge as included within the initial tree survey
U (Remove)	Tree / group / hedge in poor condition. Retention unsustainable within context of development

Impacts on Tree's / Groups

Removal	Tree / Group / Hedge will require removal in order to facilitate the development proposals
Partial Removal	Group or hedge will require partial removal to facilitate the development proposals
High	The development proposals will have a high impact the on the tree /group / hedge
Moderate	The development proposals will have a moderate impact on the tree / group /hedge
Low	The development proposals will have a low impact on the tree / group / hedge
None	The development proposals will have no impacts on the tree / group / hedge

3.2 Arboricultural Impact Table - Cascade Chart:

3.2.1 Tree **Values** are taken from BS: 5837 and comprise of the following:

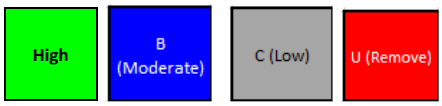

3.2.2 The **Impacts** comprise of 6 elements:



3.2.3 Causes of impacts comprise of 6 factors: '***None***', '***To facilitate development'***, '***Due to poor condition'***, '***Direct disturbance to roots'***, ***'Pruning required'*** **and** '***Possible future pruning pressure due to shade and other factors***'.

3.2.4 Comments are also included providing more information where necessary.

	REMOVAL	PARTIAL REMOVAL	HIGH	MODERATE	LOW
TO FACILTATE DEVELOPMENT	Tree / group requires removal.	Partial removal of group is required. I.e., 'a section of hedge may require removal to allow a new access road'.	N/A	N/A	N/A
DUE TO POOR CONDITION	Tree or group require removal due to poor structural and / or physiological condition.	Part of group require removal due to poor structural and / or physiological condition.	N/A	N/A	N/A
DIRECT DISTURBANCE TO ROOTS	N/A	N/A	In many case this will result in the loss of tree/s - refer to '**TO FACILIATE DEVELOPMENT**'. In rare cases a Tree/s may be retained but damage will occur to the roots.	Disturbance will be caused to roots of a tree/s that are likely to result in some physiological and structural dysfunction. The extent of damage does not require trees to be felled. Remedial actions may be taken in some cases that would help mitigate against damage but site topography, tree age, condition and species condition may result in disturbance being considered **MODERATE** as opposed to **LOW.**	Activity will occur within the root protection area of trees which will have a low impact, or can be mitigated by special measures.
PRUNING REQUIRED	N/A	N/A	Pruning that may retain a tree but will have a potential impact on the tree condition and visual appearance	Pruning is required that is acceptable within recommendations within BS3008:2010, but would require a material alteration to the tree/group affected.	Pruning is required that will have little impact to the structural, physiological and visual amenity of a tree or group.
POSSIBLE FUTURE PRUNING PRESSURE DUE TO SHADE OR OTHER FACTORS	Removal of tree/s required as retention is unsustainable and/or undesirable within the context of development. i.e. fast growing tree in small garden.	Partial removal of tree/s required as retention is unsustainable and/or undesirable within the context of development. i.e. fast growing tree in small garden.	Tree/s likely to cause significant shading. i.e. small garden areas with dense mature trees to south.	Some level of shade or other inconvenience will occur. Not highly oppressive, but some residents may seek management of trees in long term.	Some level of shading / overhang will occur.

3.3 ARBORICULTURAL IMPACT TABLE - RESULTS

Ref No.	Species	Value	Impact	Impact Cause	Management Options / Comments	Other
1T	Ash	**U**	Removal	**To facilitate development**		
2T	Sycamore	**B2**	Moderate	**Direct disturbance to roots**	A new footway and retainer will be required which will ingress into the root protection area. It is proposed to include an area of root zone amelioration. An area surrounding the tree to be subject to root zone amelioration via removal of existing turf/flora, application of soil improver and mulching.	The garden areas of plots 1 to 11 will have a retainer structure to separate ground levels from the new houses and rear garden areas which contain root protection areas.
3G	Apple x 1, plum x 2, sycamore x 1	**C2**	Removal	**To facilitate development**	Removal of this group is required to open up garden areas of Plots 1 & 2.	The trees must be removed in a controlled manner and the roots either grubbed out by hand tools or using a self powered stump grinder.
4T	Ash	**U**	None	**N/a**	Poor quality young Ash tree with Ash-Dieback situated off-site.	Ideally this tree should be removed, though removal can only take place with the consent/co-operation of the adjacent tree/land owner.

Ref No.	Species	Value	Impact	Impact Cause	Management Options / Comments	Other
5T	Goat willow	**B2**	Low	**Direct disturbance to roots**	The garden areas of plots 1 to 11 will have a retainer structure to separate ground levels from the new houses and rear garden areas which contain root protection areas.	
			Low	**Pruning required**	Reduce the southerly lateral canopy spread to the south back by approximately 1.5m in length and blend into remaining canopy.	Crown lift all around to 2m above ground level.
6T	Sycamore	**C2**	None	**N/a**		
7G	3 x sycamore, 1 x elder	**C2**	None	**N/a**	The garden areas of plots 1 to 11 will have a retainer structure to separate ground levels from the new houses and rear garden areas which contain root protection areas.	
8G	2 x sycamore	**C2**	Removal	**To facilitate development**		
9T	Silver birch	**C2**	Removal	**To facilitate development**		

Ref No.	Species	Value	Impact	Impact Cause	Management Options / Comments	Other
10T	Sycamore	**B2**	Low	**Direct disturbance to roots**	The garden areas of plots 1 to 11 will have a retainer structure to separate ground levels from the new houses and rear garden areas which contain root protection areas.	
11T	Sycamore	**C2**	None	**N/a**	The garden areas of plots 1 to 11 will have a retainer structure to separate ground levels from the new houses and rear garden areas which contain root protection areas.	
12T	Sycamore	**C2**	None	**N/a**	The garden areas of plots 1 to 11 will have a retainer structure to separate ground levels from the new houses and rear garden areas which contain root protection areas.	
13T	Sycamore	**B2**	None	**N/a**		
13Ta	Sycamore	**B2**	None	**N/a**		
13Tb	Sycamore	**C3**	None	**N/a**		

Ref No.	Species	Value	Impact	Impact Cause	Management Options / Comments	Other
13Tc	Sycamore	**B2**	None	**N/a**		
13Td	Hawthorn	**C3**	Removal	**To facilitate development**		
13G	5x Sycamore	**B2**	None	**N/a**		
14G	3x Sycamore	**A2**	Partial Removal	**To facilitate development**	One of the three trees will require removal for installation of PROW.	
14T	Ash	**C1**	None	**N/a**		
15G	Ash, sycamore,	**C3**	Removal	**To facilitate development**		

Ref No.	Species	Value	Impact	Impact Cause	Management Options / Comments	Other
16G	4 x sycamore	**B2**	Low	**Pruning required**	Reduce the southerly lateral canopy spread to the south back by approximately 2.5m in length and blend into remaining canopy.	
			Moderate	**Direct disturbance to roots**	Ground levels to the south of the trees to be raised. A three dimensional cellular confinement system to be used for raising of levels adjacent the tree.	
17G	1 x sycamore, 1 x ash	**C2**	None	**N/a**		
18G	Sycamore, elder, oak	**C3**	Removal	**To facilitate development**		
19T	Hawthorn	**B2**	Removal	**To facilitate development**		
20T	Sycamore	**B2**	Moderate	**Direct disturbance to roots**	Ingress within nominal root protection area. Area affected is on opposite side of stream adjacent to the tree.	Ground levels to the south of the trees to be raised. A three dimensional cellular confinement system to be used for raising of levels adjacent the tree.

Ref No.	Species	Value	Impact	Impact Cause	Management Options / Comments	Other
20Ta	Ash	**U**	Removal	**Due to poor condition**		
21T	Sycamore	**C2**	Removal	**To facilitate development**		
22G	Sycamore	**C2**	Removal	**To facilitate development**		
23T	Sessile oak	**C2**	Removal	**To facilitate development**		
24T	Sessile oak	**B2**	Removal	**To facilitate development**		
25G	Sycamore, ash, elder, hawthorn	**C2**	Removal	**To facilitate development**		
26G	2 x hawthorn	**C2**	Removal	**To facilitate development**		

Ref No.	Species	Value	Impact	Impact Cause	Management Options / Comments	Other
27G	Ash	**U**	Removal	**Due to poor condition**		
28T	Hawthorn	**C2**	Removal	**To facilitate development**		
29H	Mixed species	**C3**	None	**N/a**	Plot 16 to 21 to have a retainer installed within the rear garden areas to separate the final floor levels of houses from the root protection areas of retained vegetation and trees along the southern boundary.	
30T	Silver birch	**B2**	Low	**Possible future pruning pressure due to shading and/or other factors**	Tree will result in some direct shading of plot 22. The level of shading is acceptable.	Plot 18 to 21 to have a retainer installed within the rear garden areas to separate the final floor levels of houses from the root protection areas of retained vegetation and trees along the southern boundary.
31G	Laburnum, larch and Holly	**B2**	Low	**Possible future pruning pressure due to shading and/or other factors**	Direct shading will occur to both plots 20 & 21.	Relatively low height of group will restrict shade impact.

Ref No.	Species	Value	Impact	Impact Cause	Management Options / Comments	Other
32T	Beech	**B2**	Low	**Pruning required**	Reduce back the northerly lateral canopy spread by approximately 5m. While the level of pruning in terms of canopy loss is moderate, the section of canopy overhanging the site is attached to a single scaffold branch which has developed a structurally weak attachment. There is a foreseeable possibility that without pruning intervention the scaffold limb may fracture/fail.	Access to the trees may be required in order to undertake these works. This would require the consent and co-operation of the neighbouring tree owners.
			High	**Possible future pruning pressure due to shading and/or other factors**	Direct shading will occur to both plots 18, 19 & 20.	While the tree individually will cause moderate levels of shade, as a collective with adjacent trees the shade impacts increase.
33T	Sycamore	**A2**	High	**Possible future pruning pressure due to shading and/or other factors**	Direct shading will occur to both plots 18, 19 & 20.	While the tree individually will cause moderate levels of shade, as a collective with adjacent trees the shade impacts increase.
34T	Sycamore	**B2**	Moderate	**Direct disturbance to roots**	There will be significant impacts within the root-zone.	Construction space for the construction of Plot 17 will be significantly constrained.
			Low	**Pruning required**	Reduce back the northerly lateral canopy spread by approximately 2m.	
			Moderate	**Possible future pruning pressure due to shading and/or other factors**	Shading will occur within a section of the mid-garden of plot 17 until about mid-day.	

Ref No.	Species	Value	Impact	Impact Cause	Management Options / Comments	Other
35T	Sycamore	**C2**	Removal	**To facilitate development**		
35Ta	Sycamore	**C3**	Removal	**To facilitate development**	Low value tree that will outgrow its location.	
36Tb	Ash	**C3**	High	**Pruning required**	Low value off-site tree that is heavily suppressed. Prune back the overhanging canopy back to the site boundary.	
35Tc	Sycamore	**C3**	None	**N/a**		

Ref No.	Species	Value	Impact	Impact Cause	Management Options / Comments	Other
36G	Ash and Sycamore	**A2**	Low	**Direct disturbance to roots**	Plot 13 to 17 to have a retainer installed within the rear garden areas to separate the final floor levels of houses from the root protection areas of retained vegetation and trees along the southern boundary.	
			Moderate	**Possible future pruning pressure due to shading and/or other factors**	Shading will occur after mid-day to plot 13 to 16.	
			Low	**Pruning required**	Reduce back overextending sections of canopy by approximately 1.5m. Note that most of the canopy of the group falls behind the boundary line.	Access to the trees may be required in order to undertake these works. This would require the consent and co-operation of the neighbouring tree owners.
37T	Sycamore	**C1**	Low	**Pruning required**	Reduce back the northerly lateral canopy spread by approximately 2m.	-
			Moderate	**Possible future pruning pressure due to shading and/or other factors**	Tree will contribute to shading of plots 18 & 19.	
38T	Sycamore	**C2**	Moderate	**Possible future pruning pressure due to shading and/or other factors**	Tree will contribute to shading of plot 18.	

Ref No.	Species	Value	Impact	Impact Cause	Management Options / Comments	Other
39T	Sycamore	**B1**	Moderate	**Possible future pruning pressure due to shading and/or other factors**	Tree will contribute to shading of plot 18.	
40T	4x Sycamore	**B2**	Moderate	**Possible future pruning pressure due to shading and/or other factors**	Tree will contribute to shading of plot 18	

4.0 General Issues

4.1 Installation of underground services

At the time of considering the layout design, no information was available relating to the proposed location of underground services. By default no services shall be placed within the identified Root Protection Areas of trees being retained. While it is possible in some cases that underground services may be placed within Root Protection Areas, this is best done under arboricultural supervision (at least initially). Where special installation methods are necessary (such as pipe jacking) supplementary method statements must be provided. The proposed location of underground infrastructures must be made available to the local planning authority prior to installation.

4.2 Storage of materials, contractor parking and site logistics

Logistically the site has adequate space for the placement of site huts and material storage. By default all compounds and storage areas are to be outside root protection areas/construction exclusion zones.

4.3 Level changes on site

No excavation or raising of ground levels are to occur within the construction exclusion zones within the site demarked by tree protection barrier fencing (green coloured zones) within the Tree Protection Plan.

4.4 Use of three dimensional cellular confinement system

Ground level differentials are to be created within the site using retaining structures to isolate levels changes occurring within the root protection areas of trees along the northerly and southernly boundaries.

In the case of plot 13, ground levels require raising to the north of the plot within the root protection area of group 16G. Similarly ground levels will require raising adjacent tree 20T.

It is proposed that the ground levels in these locations are raised by use of a three dimensional cellular confinement system. Such a system will comprise a two dimensional geotextile ground separation (to be applied following skimming of existing turf/grass layer), the placement of layers of three dimensional cellular confinement system, a layer of stone and top-soil mix with a final turf layer of grass applied. The principle is shown below:

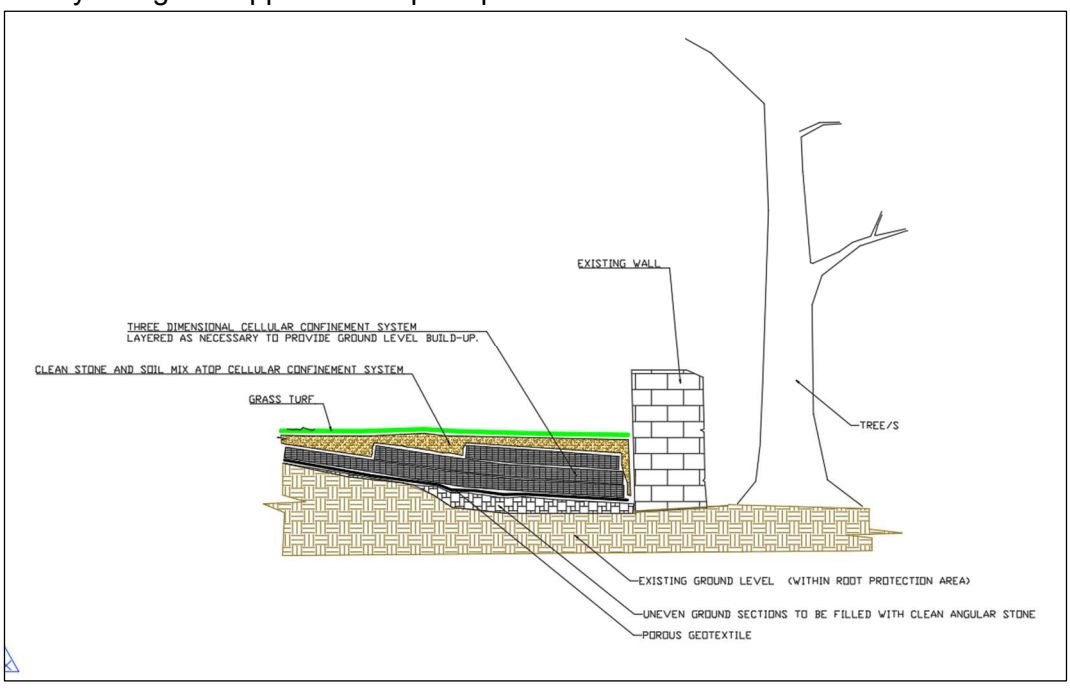

5.0 Arboricultural Method Statement

5.1 The Arboricultural Method Statement (AMS) specifies all measures to be undertaken to ensure the ongoing health and viability of trees to be retained within the proposed development.

5.2 This AMS is in compliance with British Standard 5837: 2012**. Accompanying this document is a plan that shows the position of protective fencing and any additional special measures that are required. This plan is referred to as the *Tree Protection Plan*.**

5.3 The AMS must be considered a 'working document'. It must be made available to the developer, site manager, and LPA. A copy of this document and the Tree Protection Plan must be kept on the development site at all times. All site operatives must be briefed on the main contents of this document.

5.4 It is the Site/Project Manager's responsibility to ensure that the detail of this AMS and the TPP and any agreed amendments are known and understood by all site personnel. A copy of this AMS and the TPP will be available for reference on site by the Project and Site Managers, and will form the basis of the management of all works relating to the trees on the site following commencement of the project. The Site Manager shall induct all personnel who could have an impact on trees on the content of this document.

5.5 Tree Works –General Issues

5.5.1 All tree works (tree felling and pruning) are to take place prior to any site operations and immediately before the installation of protective fencing.

5.5.2 All works to the existing trees are to be carried out by a fully qualified tree surgeon and in accordance with BS 3998 (2010) *Recommendations for Tree Work*.

5.5.3 The necessary tree surgery works should be carried out **before** any construction work starts and immediately before erection of protective fencing. Any works will include any trees that require removal in order to facilitate construction and access. No tree works must be carried out unless permission is provided by the local planning authority. Tree works to any protected trees (trees within a Conservation Area or subject to a Tree Preservation Order) that do not require works to directly enable the development to proceed will require a notification/application to be made to the Local Planning Authority. Any tree works required in order to directly facilitate the development to proceed (such as tree felling) must not proceed unless full planning consent and written consent is given by the local planning authority.

5.5.4 Wildlife issues and timing of operations. The following must be observed:

Bats. Under current legislation it is an offence to 'intentionally or recklessly disturb a bat' or 'damage, destroy or block access to the resting place of any bat'. For further details consultation must be made with the Statutory Nature Conservancy Organisation (Natural England, 0300 060 1842 www.naturalengland.org.uk). Where relevant any current ecological surveys for the site will take precedence in this matter.

5.5.5 Birds. It is an offence to kill, injure or take any wild bird; or take, damage or destroy the nest of any wild bird while it is in use or being built. Therefore work likely to disturb nesting birds should be avoided from late March to August.

5.6 Tree Protective Barrier Fencing

5.6.1 Protective barriers must be erected prior to any site operations. The protective barriers are essential to prevent root severance or compaction of the soil in the Root Protection Areas, and so give the best chance of continued good health of the retained trees.

5.6.2 Tree protective barriers are to comprise a vertical and horizontal scaffold framework which is braced to withstand impacts, and not easily moved or relocated by site operatives (to prevent opportunistic moving of the barrier fences). The vertical tubes should be spaced at intervals of no more than 3m and driven securely into the ground. Onto this framework welded mesh panels should be securely fixed (such as Heras). The fencing is to be placed accurately as shown within the Tree Protection Plan. A scale copy of the tree protection plan shall be referenced and scale measurements taken to indicate the necessary fencing positions.

BS 5837 (2012) Tree Protection Fencing

NOTES

1. STANDARD SCAFFOLD POLES.
2. HEAVY GAUGE 2 M TALL GALVANIZED TUBE AND WELDED MESH INFILL PANELS.
3. PANELS SECURED TO UPRIGHTS AND CROSS-MEMBERS WITH WIRE TIES.
4. GROUND LEVEL.
5. UPRIGHTS DRIVEN INTO THE GROUND UNTIL SECURE (MINIMUM DEPTH 0.6 M).
6. STANDARD SCAFFOLD CLAMPS.

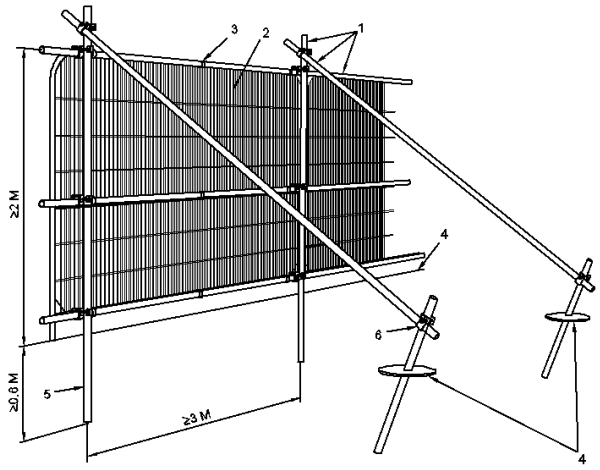

Care must be taken when locating vertical poles to avoid underground services and, in the case of bracing poles, also to avoid contact with structural roots. If the presence of underground services prevents the use of driven poles, an alternative specification should be prepared; such alternatives could include the attachment of the panels to a free standing scaffold support framework.

Where fencing is required adjacent the site boundaries it is acceptable to use Hoarding to double as protective fencing but only where the exact location of the protective fencing is adhered to (as per the Tree Protection Plan) and where it is hand installed only.

5.7 General Requirements

5.7.1 Developers must enforce the methods of protection identified within the statement. All contractors must also agree to them. Any failure to comply with them must be dealt with by the developer. Any damage that may occur to trees due to failure to observe the method statement must be reported to the Local Planning Authority and arboricultural advice must be sought.

5.7.2 No pruning, lopping, felling or severance of roots is to take place without prior consent of the local authority or unless in compliance with specifications included within the Method Statement.

5.7.3 **The ground levels within the protected areas, be they fenced or special working areas, must neither be raised nor excavated unless specifically in compliance with requirements within this method statement.**

5.7.4 No ropes, cables, services, or notice boards shall be fixed to existing trees.

5.7.5 Fires should not be permitted, or else not lit where flames could extend to within 10m of the foliage, branches or trunk of any trees (it should be noted that local environmental health authorities may have specific restrictions on fires),

5.7.6 Should temporary access within the Root Protection Area be required that is not included within the method statement, an agreement, in advance, with the consultant and the LPA must be made. The fence may need to be re-aligned and the ground surface protected. For vehicular access this protection will need to be specifically detailed and agreed.

5.7.7 Care must be taken in regard to tall or wide loads, or use of plant with booms, jibs and counterweights. Where machinery may be required to operate in the vicinity of trees a banksman must ensure that no direct physical damage is caused to trees. It must be checked that any materials or vehicles entering the site are able to do so without causing damage to adjacent trees.

5.7.8 Any material that will contaminate soil (e.g. concrete mixings, and vehicle washings) must not be discharged within 10m of any Root Protection Area. In addition it is essential that allowance be made for the slope of the ground so that damaging materials cannot run towards trees, or Root Protection Areas. If diesel and fuel containers are used or stored on site they must be kept within a plastic container bund to prevent any ground contamination and spill kits must be kept available to remediate any spillage.

5.8 Arboricultural monitoring

(i) The arboricultural consultant (or local authority Tree Officer) shall be consulted whenever an unexpected issue occurs that involves any retained tree on site including access within the Protection Area.

Mike Gregory (Arboricultural Consultant) 07515827944.

(ii) No amendments shall be made to the methods detailed in this Arboricultural Method Statement without the agreement of the consultant or local planning authority Tree Officer.

(ii) If the site agent is at all unclear about exact compliance with any of the above requirements, or if requested by any other party, then a pre-start meeting shall be arranged with the architect, site agent, local authority tree officer and arboricultural consultant in attendance as necessary.

5.9 Health and Safety Issues

All operations must be carried out with full regard to Health and Safety requirements. Due to the diverse nature of recommendations included (e.g. tree surgery works, construction etc) it is necessary that supervisors of those undertaking recommended operations undertake risk assessments prior to starting the relevant works. It should be the Site Managers/developers responsibility to ensure that risk assessments are submitted prior to undertaking relevant works.

6.0 Method Statement Schedule

<table>
<tr><th>Phase</th><th>Requirements</th><th>Method</th></tr>
<tr>
<td>1

Prior to erection of protective fencing.</td>
<td>Undertake tree and vegetation removal and pruning works

Trees/vegetation to be removed:
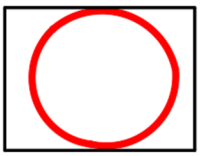

Trees/vegetation to be pruned:
</td>
<td>Refer to section 5.5 of AIA/MS report.

All tree works to be carried out to BS3998: 2010: by suitably qualified and insured professional tree surgeons.

The following tree felling <u>must</u> be undertaken at this Phase:
<table>
<tr><th colspan="2">Items requiring removal:</th></tr>
<tr><td>1T</td><td>Ash</td></tr>
<tr><td>3G</td><td>Apple x 1, plum x 2, sycamore x 1</td></tr>
<tr><td>8G</td><td>2 x sycamore</td></tr>
<tr><td>9T</td><td>Silver birch</td></tr>
<tr><td>13Td</td><td>Hawthorn</td></tr>
<tr><td>14G</td><td>3x Sycamore (partial removal only – one tree from the group require removal).</td></tr>
<tr><td>15G</td><td>Ash, sycamore,</td></tr>
<tr><td>17G</td><td>1 x sycamore, 1 x ash</td></tr>
<tr><td>18G</td><td>Sycamore, elder, oak</td></tr>
<tr><td>19T</td><td>Hawthorn</td></tr>
<tr><td>20T</td><td>Sycamore</td></tr>
<tr><td>21T</td><td>Sycamore</td></tr>
<tr><td>20Ta</td><td>Ash</td></tr>
<tr><td>22G</td><td>Sycamore</td></tr>
<tr><td>23T</td><td>Sessile oak</td></tr>
<tr><td>24T</td><td>Sessile oak</td></tr>
<tr><td>25G</td><td>Sycamore, ash, elder, hawthorn</td></tr>
<tr><td>26G</td><td>2 x hawthorn</td></tr>
<tr><td>27G</td><td>Ash</td></tr>
<tr><td>28T</td><td>Hawthorn</td></tr>
<tr><td>35T</td><td>Sycamore</td></tr>
<tr><td>35Tc</td><td>Sycamore</td></tr>
</table>
The following tree pruning <u>must</u> be undertaken at this Phase:
<table>
<tr><th colspan="2">Items requiring pruning:</th></tr>
<tr><td>5T</td><td>Goat Willow. Reduce the southerly lateral canopy spread to the south back by approximately 1.5m in length and blend into remaining canopy. Crown lift all around to 2m above ground level.</td></tr>
<tr><td>16G</td><td>4 x sycamore. Reduce the southerly lateral canopy spread to the south back by approximately 2.5m in length and blend into remaining canopy.</td></tr>
<tr><td>32T</td><td>Beech. Reduce the northerly lateral canopy spread by approximately 5m in length.</td></tr>
<tr><td>34T</td><td>Sycamore. Reduce back the northerly lateral canopy spread by approximately 2m in length.</td></tr>
<tr><td>36Tb</td><td>Ash. Prune back the overhanging canopy to the site boundary.</td></tr>
<tr><td>36G</td><td>Ash & Sycamore Group. Prune back overextending sections of canopy by approximately 1.5m in length.</td></tr>
<tr><td>37T</td><td>Sycamore. Reduce back the northerly lateral canopy spread by approximately 2m in length.</td></tr>
</table>
</td>
</tr>
</table>

Phase	Requirements	Method
2 Prior to any construction works on site	Erection of protective fencing: To retain throughout the duration of the development: 	Protective fencing is to be erected in accordance with 5.6 of AIA/MS report. The fencing **must** comply with the positions shown in the Tree Protection Plan. A scale copy of the Tree Protection Plan must be used as reference and fencing positions measured from the Plan using a scale rule and/or using the provided distances where shown or use of Easting & Northing points as obtained from the CAD drawing of the Tree Protection Plan. No works, no storage of materials, no access, or any ground disturbance is to take place within the Tree Protection Barrier Fencing other than works specified within the Arboricultural Method Statement. **Fenced areas are to be treated as Construction Exclusion Zones.** Warning signs to be placed on all protective fencing. For large sections of fencing the signs must be placed at 20m intervals. Signs must be laminated and securely attached at all corners. Two signs are to be placed side by side; copies of which are attached within **Appendix A**.
3 Verifying quality of protective barriers	Verify that the location and quality of tree protection barriers is adequate prior to onset of main site works.	Site visit with Arboricultural Consultant and Site Manager. Tree Officer to be pre-informed of visit. In order for set works to proceed the pro-forma in **Appendix B**. of the AIA/AMS report is to be completed and passed on to the local planning authority: **If the protective barriers are not adequately, work is not to proceed until rectified.**
4 Ongoing	Maintain protective fencing	The tree protective barrier fencing is to remain in situ during all construction works.
5 During Construction Works	Installation of cellular confinement system 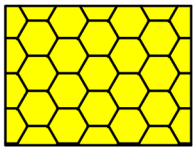	Raised ground levels within the root protection area of 16G and 20T to be achieved by use of three dimensional cellular confinement system. Full specification for the installation of the system to be determined by site engineers.

Phase	Requirements	Method
6 Completion of main construction and undertaking of landscaping	Landscaping and Dismantling of tree barrier protective fencing.	It is essential that ground levels within the root protection areas are not altered, either by raising or lowering soil levels; even at the landscaping stage. Landscaping operations must be undertaken in a manner that will not impact trees. Landscaping within the root protection area of trees must be undertaken in the following manner: 1. Any existing ground flora (grass/weeds/scrub) is to be sprayed with a systemic herbicide and left to die-off. 2. Dead flora is to be strimmed as hard as possible with a brush cutter or similar. The bulk of the strimmed material is to be removed by raking. 3. A good quality organic topsoil layer may be placed down. Small depressions may be filled (and **lightly** compacted underfoot). Placed topsoil soil layers **must not exceed** 100mm depth. 4. No plant machinery operating within the root protection areas to exceed 1 tonne gross weight and must only operate from propriety ground protection boards such as DuraMatt Access Matts (see **Appendix C**). 5. Turf and other planting to proceed thereafter.
7 Completion of main construction and installation of boundary treatments	Erection of garden and perimeter fencing	Within the Construction Exclusion Zones of retained trees fencing shall be installed as follows: 1. Hand tools only 2. Exploratory post holes to be dug. Any roots encountered less than 2.5cm diameter should be cleanly cut back. 3. Roots in excess of 2.5cm can only be removed once arboricultural advice has been sought. 4. Where roots in excess of 8cm are encountered, an alternative location for the post hole is required. 5. Prior to the pouring of concrete a non-permeable membrane must fully line the post hole.

APPENDIX A - SIGNS TO ATTACH TO PROTECTIVE FENCING



Construction and Trees



Why Is Fencing Erected Around Trees?

1. The major cause of damage to trees on construction sites is due to **soil compaction**.
2. Roots use the spaces between soil particles to obtain Oxygen, Water and Nutrients.
3. Heavy plant and machinery compresses (compacts) the soil, squashing out the air spaces and preventing root function.
4. A compacted soil structure will stay compacted.
5. Consequently the tree suffers and will show signs of branch die-back.
6. Symptoms such as die-back may take several years to appear.
7. Soil compaction over roots can be prevented by maintaining a fenced exclusion zone over the tree roots.
8. The exclusion zone distance is calculated using British Standard 5837.
9. Protective Fencing is installed at the calculated distance.
10. Protective Fencing is a condition of planning approval, if it is removed or repositioned the construction firm is in breach of a condition and may be subjected to legal action.

APPENDIX B – Site Inspection pro-forma

SITE INSPECTION - ARBORICULTURAL METHOD STATEMENT (Ref: MG/6724/AIA&AMS/REV C/MAY23)

Site Address : **Burn Road, Huddersfield**

Name of Arboricultural Inspector:

Date of Inspection:

The purpose of this site inspection is to confirm with requirements within the above referenced Arboricultural Method Statement.

The site is to be visited and the placement of tree protection barrier fencing checked for compliance with specifications within the method statement.

Further works on the site shall not proceed until the tree protective fencing is installed in compliance with the method statement and in submitting this document to the Local Planning Authority the inspector is verifying that the necessary specifications have been met.

Notes (continue on separate attachments as necessary):

Photographs: (attach below):

APPENDIX C – GROUND PROTECTION BOARDS

(to be used for light plant access when undertaking temporary operations within the root protection areas of trees- such as fencing and landscaping)

DuraMatt Single Sided Access Mat - 2400mm x 600mm x 10mm - 17kg

Product Code: DURA-240060017SS

MAX 15-20 tonnes



MultiMatts are the market leading provider of temporary access and ground protection solutions. Temporary Access and Ground Protection Mats are now an essential requirement for the construction, civil engineering and groundwork industries, although they're also used extensively within the festival and outdoor event sectors.

Our DuraMatt - Light/Medium Duty Access Mat is manufactured from 100% recycled Low Density Polyethylene (LDPE) and weigh just 17kg. DuraMatt is ideal for both short and long term projects and can be used in a variety of applications.

DuraMatt is capable of taking weights of 15-20 tonnes* depending on the ground conditions, they've also been designed with a connection hole in each corner should the mats need to be connected together.

DuraMatt has a unique diamond pattern "non-slip" surface on one side, the other side has been left smooth for working on hard standing areas and sensitive grass, it also allows contractors to use the mat as a spoil board for construction materials. It's flexible nature allows the mats to follow the contours of the ground to deliver highly effective access over undulating or sloping terrain.

Standard colour option is Grey – Please contact us for other colours or customisation.

Key Applications

- Ground Work Spoil Boards
- Temporary Roadways and Car Parks
- Pedestrian Walkways
- Heritage sites; Eco-Sensitive areas
- Sports and Leisure Events
- Golf Course and Sports Field Maintenance
- Ground Protection
- Emergency Access Routes
- Utilities
- Infrastructure Maintenance

Key Features and Benefits

- 2.4m x 0.6m x 10mm - Weight 17kg
- Maximum Weight loading approx. 15-20 tonnes*
- Unique diamond pattern "non-slip" surface for optimal grip
- Avoids health and safety issues
- Avoids property, heritage and environmental damage and reinstatement
- Avoids vehicles becoming bogged down
- Low transportation and handling costs
- Various connection options for different ground conditions and equipment
- Premium 100% recycled (LD) polyethylene which is 100% recyclable

END OF DOCUMENT