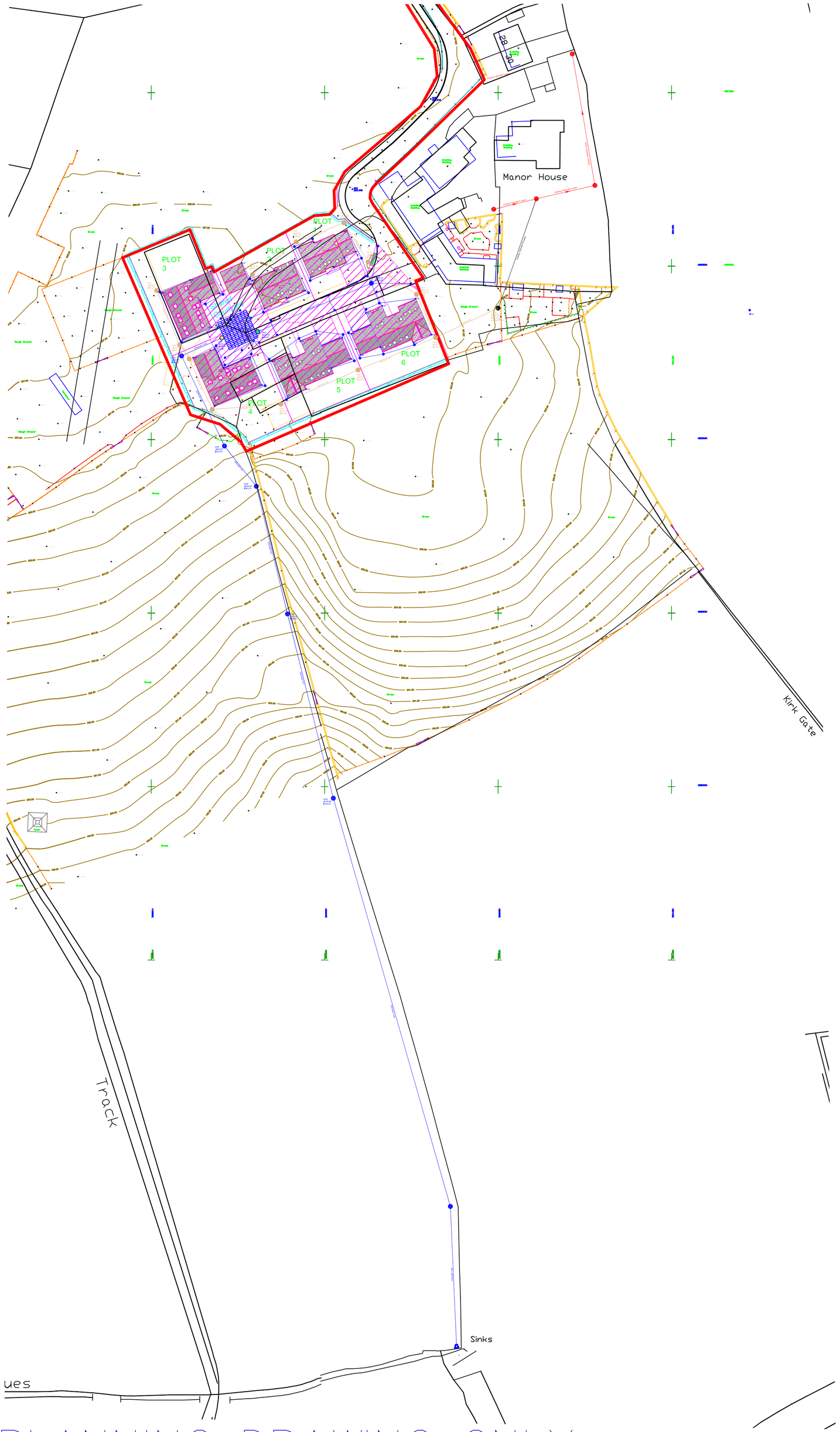

PLANNING DRAWING ONLY

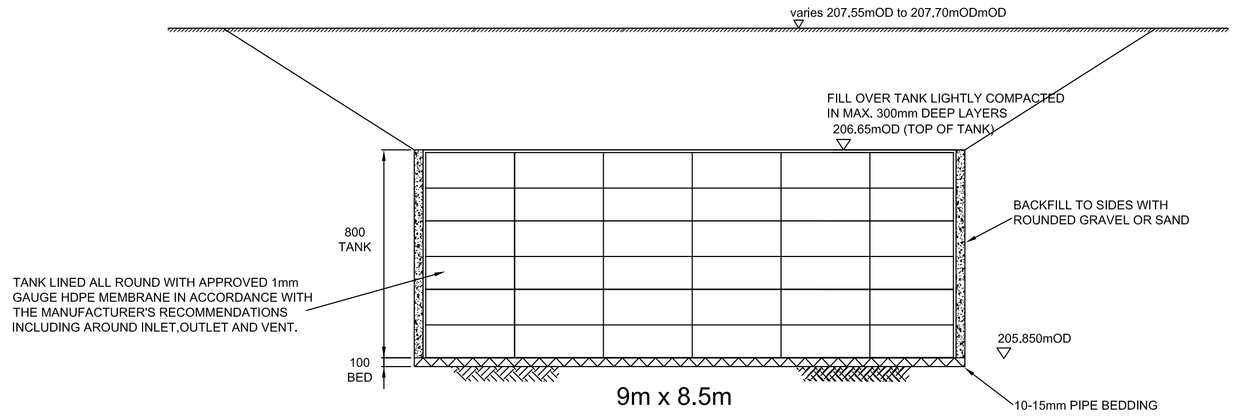

CRATE TANK - CROSS-SECTION (1:50)

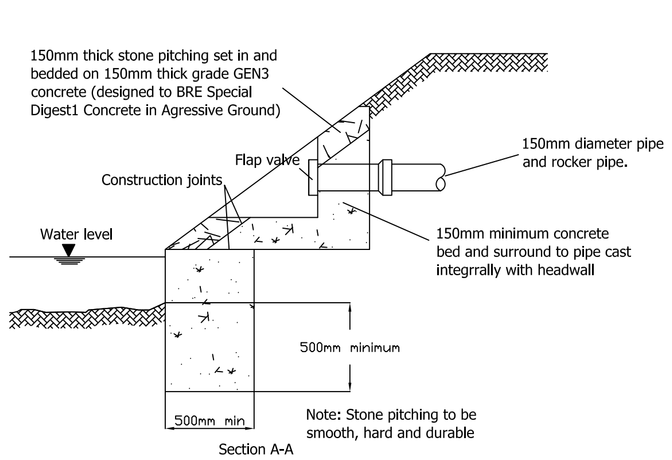

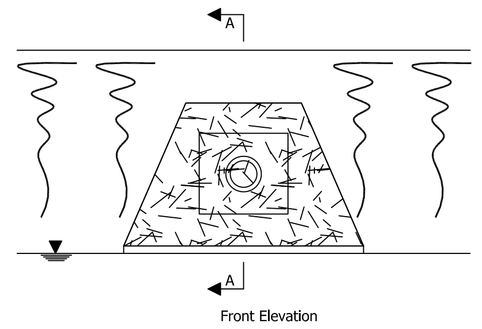

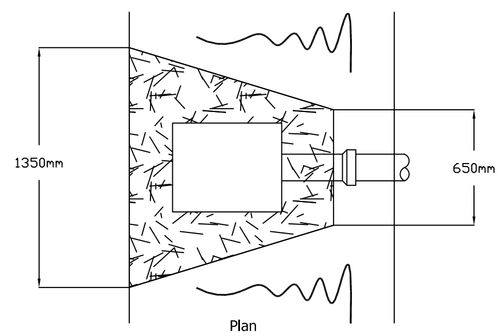

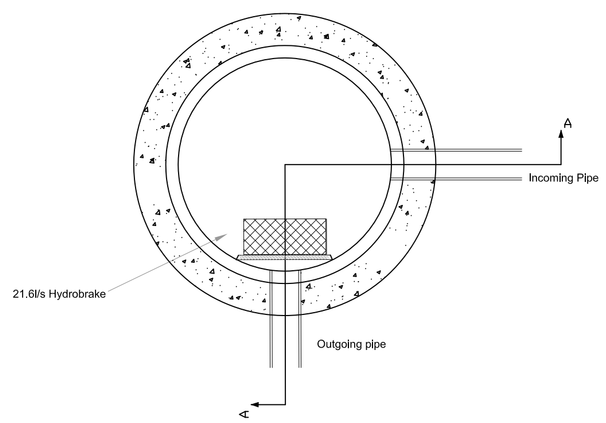

TYPICAL 1200mm FLOW CONTROL CATCHPIT MANHOLE

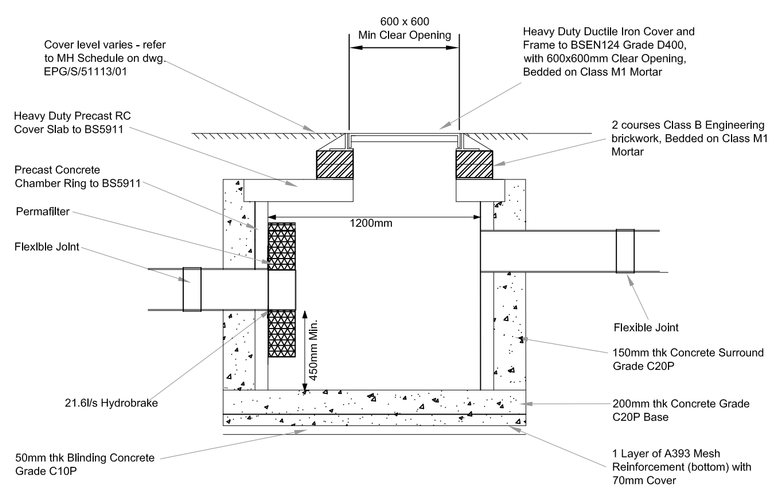

TYPICAL 1200mm FLOW CONTROL CATCHPIT MANHOLE (SW4)
SECTION A-A SCALE 1:25

NOTES

1. Driveway and car park surfacing design and construction to Engineer's Specification (by others).
2. All dimensions are in millimetres unless otherwise stated.
3. Pre-cast concrete products shall comply with the relevant provisions of BS 5911 and be 'Kite Marked'.
4. Manhole covers and frames, grids and frames shall comply with the relevant provisions of BS EN 124. D400 class manhole cover to be used within trafficked areas. A15 class manhole cover to be used in untrafficked areas.
5. Do not scale from this drawing. If in doubt ask.

Discharge rate of 21.6l/s from site into watercourse based on existing runoff minus 30%.

Occupier should undertake inspection of control manhole SW4 and silt trap manholes on a 2 monthly basis and clean when necessary.

KEY:

- Roofed & Paved Areas. Total impermeable roofed and paved area of 0.18 hectares. Roofed areas to sealed downpipes
- SW PPIC Manhole
- SW Manhole with 300mm deep sump
- SW CONC Manhole
- SW Control Manhole 1200mm dia with 300mm deep sump and 21.6l/s hydrobrake
- Attenuation Tank 76m2 by 0.8m deep to provide storage upto 100yr+CC40% storm
- ACCO Drainage Channel
- Silt Trap Gullies
- rwp Rainwater Pipes
- FW Manhole
- Existing Private FW Manhole
- Existing Public Combined Manhole

REV	DESCRIPTION	DATE
0	For Approval	26/11/21

EWE Associates Limited
7 Waveney Close
Burton Upon Stather
Scunthorpe
DN15 9DT
Tel: 07875 972270

Email : lea.favill@eweassociates.com

PROJECT
Proposed Residential Development Moorhouse Farm Birkenshaw

CLIENT
Mr & Mrs Light

DRAWING TITLE
Drainage Route & Details

SCALE	DATE
1:750	26/11/21

DRAWN BY	CHECKED BY	REVISION
LJF	JF	0

DRAWING No
EWE/2801/03