Fixed & Tilt-Over Cabinet Base
TC & TCTO Range

Technical Specification

Model Ref.	'M' Height	Tilting rear clearance 'R'	Baseplate size 'BxB'	Tube diam. 'D'	Cable access hole 'C'	Maximum equip cap'ty	Weight Kgs	Winch Selection
TC3	3 metres	n/a	550x550	Ø168	325x325	25Kg.	181.3 Kgs.	n/a
TC4	4 metres	n/a	550x550	Ø168	325x325	25Kg.	208.4 Kgs.	n/a
TCTO4		1220	550x550	Ø168	325x325	25Kg.	226.4 Kgs.	WUA
TC5	5 metres	n/a	550x550	Ø168	325x325	25Kg.	228.5 Kgs.	n/a
TCTO5		1220	550x550	Ø168	325x325	25Kg.	246.5 Kgs.	WUA
TC6	6 metres	n/a	550x550	Ø168	325x325	25Kg.	248.6 Kgs.	n/a
TCTO6		1220	550x550	Ø168	325x325	25Kg.	266.6 Kgs.	WUA
TC8	8 metres	n/a	550x550	Ø168	325x325	25Kg.	288.8 Kgs.	n/a
TC8HD		n/a	550x550	Ø219	325x325	25Kg.	331.8 Kgs.	n/a
TCTO8		1220	550x550	Ø168	325x325	25Kg.	349.8 Kgs.	WUA
TC10	10 metres	n/a	645x645	Ø219	325x325	25Kg.	384.6 Kgs.	n/a
TC10HD		n/a	645x645	Ø273	325x325	25Kg.	516.1 Kgs.	n/a
TC12	12 metres	n/a	645x645	Ø273	325x325	25Kg.	598.9 Kgs.	n/a

All dimensions in mm unless otherwise stated

Standards Applicable

- Structural Steelwork:
  BS EN 10210-1:1994, BS EN 10210-2:1997
- General Steelwork:
  BS1449:1991, BS1387:1985, BS EN 10025:1993
- Hot Dipped Galvanized:
  BS EN ISO 1461:2009
- Fasteners: Grade 8.8 BS3692:2001
  BS4190:2001, DIN931, DIN934
- Welding Procedures: Comply with
  BS EN 1011-2:2001
- Design Wind Loading: In accordance with CP3
  chapter V Pt 2 & BS 6399 Pt 2:1997
- Paint Finishes: BS4800 and RAL colour range

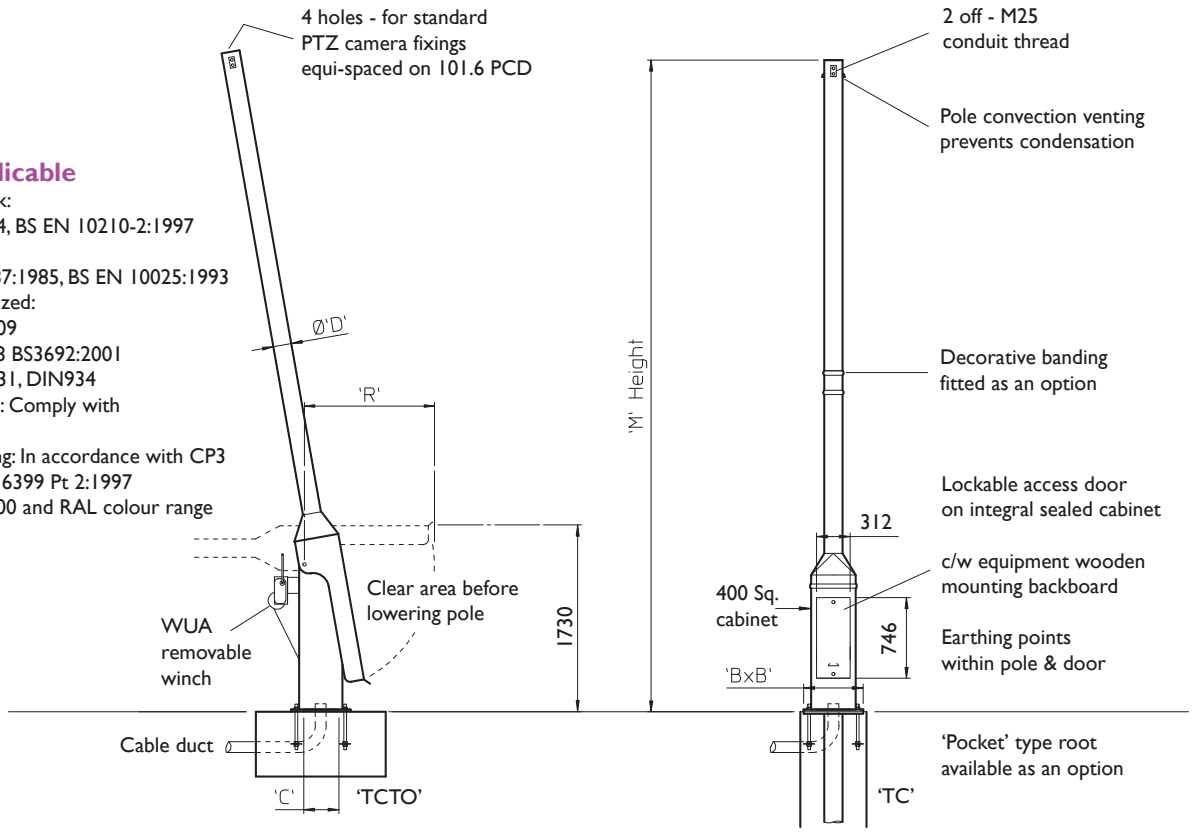

Options & Accessories

Enlarged cabinet (500 Sq.)
All pan/tilt, dome, fixed camera mount bracketry
Transferable winch for tilt-over columns
Double door access (partitioned cabinet)
Camera wash equipment (static columns only)
Ornate camera mounting brackets

Product Ref & Ordering Information

TC TO 6 HD

- TC — Town Centre 400 Sq. Cabinet Based Column
- TO — Tilt-Over Column
- 6 — Column Height in Metres
- HD — Heavy Duty Column
  when minimum deflection is required
  i.e. high zoom lens camera

All WEC products are subject to ongoing development. Therefore, we reserve the right to make technical modifications without notice.
BRITANNIA HOUSE, JUNCTION STREET, DARWEN, LANCASHIRE, BB3 2RB. TEL: (01254) 700200. FAX: (01254) 873637. E-MAIL: all@wec.uk.net

Fixed & Tilt-Over Cabinet Base
TC & TCTO Range

Base and Windload Specification

Concrete Foundation Table *X x Y x Z*							
Model Ref	Height	Area of Country			Area of Town		
		A	B	C	A	B	C
TC3	3m	0.8x0.8x 0.4m Dp.	0.8x0.8x 0.4m Dp.	0.9x0.9x 0.45m Dp.	0.8x0.8x 0.4m Dp.	0.8x0.8x 0.4m Dp.	0.8x0.8x 0.4m Dp.
TC4 TCT04	4m	0.9x0.9x 0.45m Dp.	0.9x0.9x 0.45m Dp.	0.9x0.9x 0.45m Dp.	0.8x0.8x 0.4m Dp.	0.9x0.9x 0.45m Dp.	0.9x0.9x 0.45m Dp.
TC5 TCT05	5m	1.0x1.0x 0.5m Dp.	1.0x1.0x 0.5m Dp.	1.0x1.0x 0.5m Dp.	0.9x0.9x 0.45m Dp.	1.0x1.0x 0.5m Dp.	1.0x1.0x 0.5m Dp.
TC6 TCT06	6m	1.0x1.0x 0.5m Dp.	1.1x1.1x 0.55m Dp.	1.2x1.2x 0.6m Dp.	1.0x1.0x 0.5m Dp.	1.1x1.1x 0.55m Dp.	1.1x1.1x 0.55m Dp.
TC8 TCT08	8m	1.2x1.2x 0.6m Dp.	1.3x1.3x 0.65m Dp.	1.3x1.3x 0.65m Dp.	1.1x1.1x 0.55m Dp.	1.2x1.2x 0.6m Dp.	1.3x1.3x 0.65m Dp.
TC10	10m	1.4x1.4x 0.7m Dp.	1.5x1.5x 0.75m Dp.	1.6x1.6x 0.8m Dp.	1.3x1.3x 0.65m Dp.	1.4x1.4x 0.7m Dp.	1.5x1.5x 0.75m Dp.
TC12	12m	1.7x1.7x 0.85m Dp.	1.8x1.8x 0.9m Dp.	1.9x1.9x 0.85m Dp.	1.6x1.6x 0.8m Dp.	1.7x1.7x 0.85m Dp.	1.8x1.8x 0.9m Dp.

A minimum soil bearing pressure of 75 KN/m2 is assumed

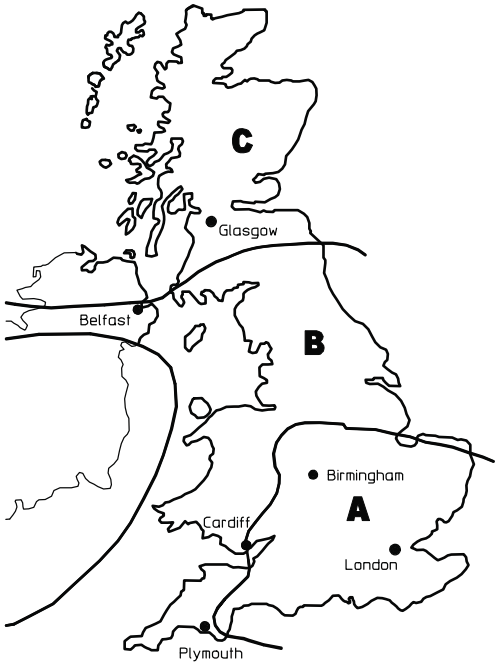

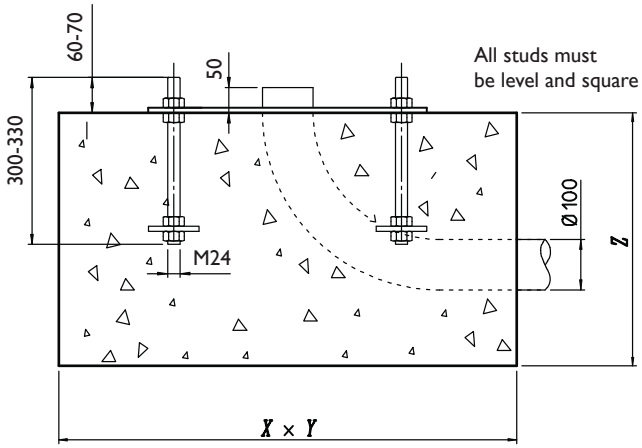

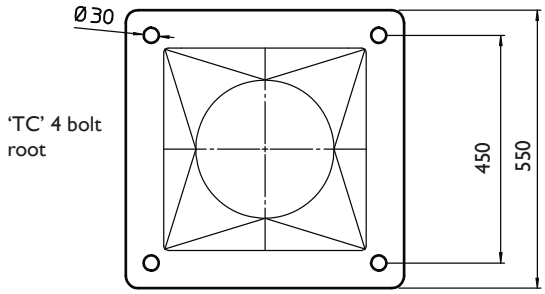

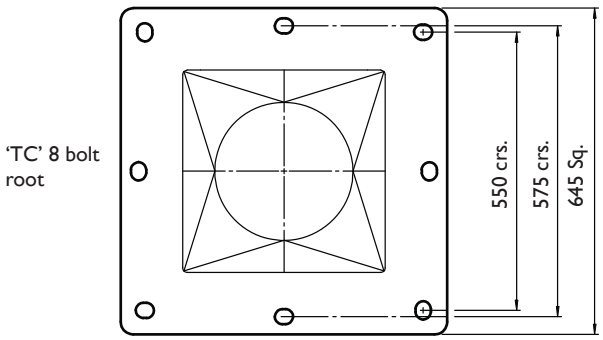

Installation Method

1. From the map, select location of installation
2. Excavate as per recommended area and depth
3. Assemble root base as shown in fig. 1
4. Insert root base into the hole ensuring that it is level and that the four studs protrude 60-70mm above the concrete foundation
5. Fit the cable duct if routing via the interior of the column. A plastic pipe of approximately 100mm outside diameter is recommended for this. Ensure this protrudes through the template by 50mm minimum.
6. Pour concrete ensuring that it is a mix of C35 to table 6 BS 8110 and then tamp down well
7. Fit the setting template over the four protruding studs, double-checking that they are level and that clear access can be gained to the cable duct if it is being used
8. Leave the concrete to cure for a minumum of 72 hours prior to attempting to erect the column
9. When fitting the column, ensure that the concrete base is in complete contact with the underside of the column and grout accordingly
10. When the column has been fitted, protect the studs with a suitable protective coating. Denzo tape or similar is recommend for this

fig. 1

TC Root Assembly
(4 bolt assembly shown)

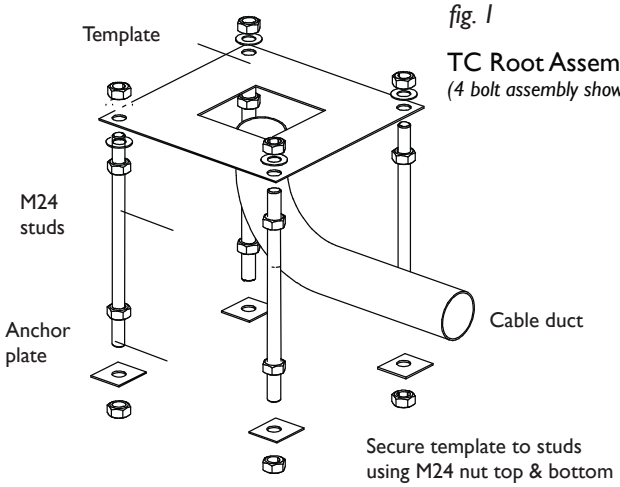

All WEC products are subject to ongoing development. Therefore, we reserve the right to make technical modifications without notice.
BRITANNIA HOUSE, JUNCTION STREET, DARWEN, LANCASHIRE, BB3 2RB. TEL: (01254) 700200. FAX: (01254) 873637. E-MAIL: all@wec.uk.net

Fixed & Tilt-Over Cabinet Base
CB & CBTO Range

Technical Specification

Model Ref.	'M' Height	Tilting rear clearance 'R'	Maximum equipment capacity	Shaft diameter 'D'	Weight Kgs	Winch Selection
CB4	4 metres	n/a	25Kg.	Ø139	175Kgs.	n/a
CBTO4		1220	25Kg.	Ø139	222Kgs.	WUA
CB5	5 metres	n/a	25Kg.	Ø139	195Kgs.	n/a
CBTO5		1220	25Kg.	Ø139	242Kgs.	WUA
CB6	6 metres	n/a	25Kg.	Ø139	215Kgs.	n/a
CBTO6		1220	25Kg.	Ø139	262Kgs.	WUA
CB8	8 metres	n/a	25Kg.	Ø139	255Kgs.	n/a
CBTO8		1220	25Kg.	Ø139	302Kgs.	WUA

All dimensions in mm unless otherwise stated

Standards Applicable

- Structural Steelwork:
  BS EN 10210-1:1994, BS EN 10210-2:1997
- General Steelwork:
  BS1449:1991, BS1387:1985, BS EN 10025:1993
- Hot Dipped Galvanized:
  BS EN ISO 1461:2009
- Welding Procedures: Comply with BS EN 1011-2:2001
- Fasteners: Grade 8.8 BS3692:2001 BS4190:2001, DIN931, DIN934
- Design Wind Loading: In accordance with CP3 chapter V Pt 2 & BS 6399 Pt 2:1997
- Paint Finishes: BS4800 and RAL colour range

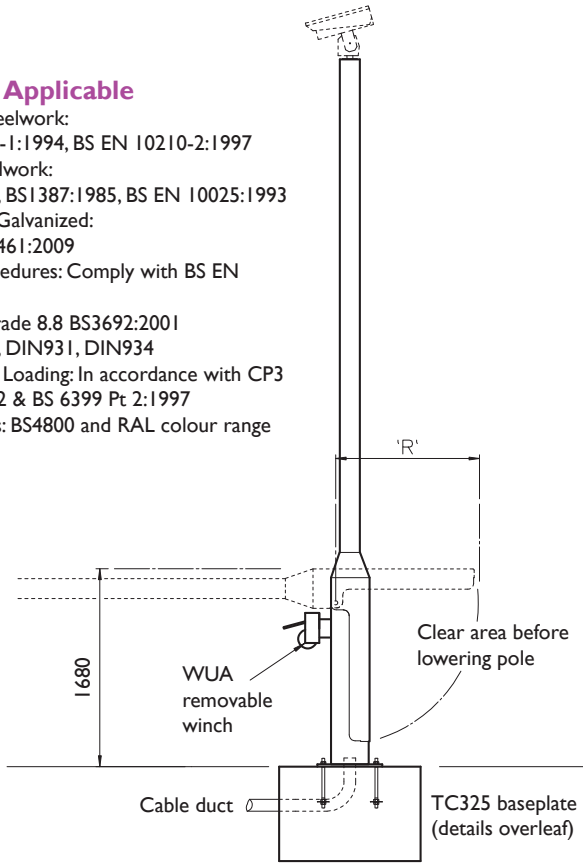

CBTO

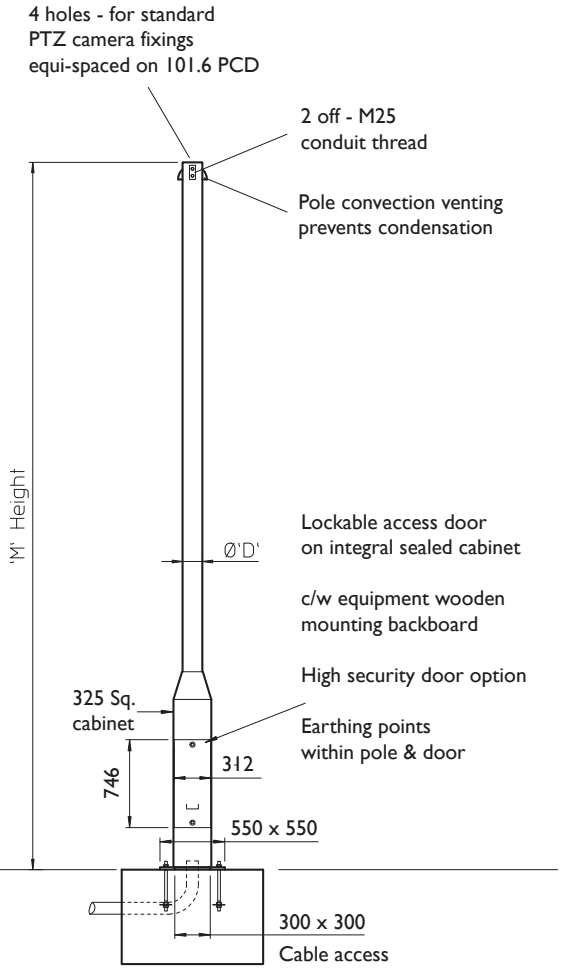

CB

Accessories & Adaptors

CB(TO)/ACB	Anti-Climb Bracket
CB(TO)/Paint	Paint to BS4800 & RAL Colours
CB(TO)/SDA	Swept Dome Adaptor
CB(TO)/SDA2	Swept Dome Adaptor Dual
CB(TO)/PT1-S2	1 Pan & Tilt c/w 2 Static Adaptors
CB(TO)/TPTA	Twin Pan & Tilt Adaptors
CB(TO)/2SA	Twin Static Adaptor
CB(TO)/1SA	Pan & Tilt - Single Fixed
CB(TO)/CS150-300	Column Spacers 150mm-300mm
CB(TO)/TBC	Telemetry Clamp Bracket
CB(TO)/HSD-F	High Security Door Option
CB(TO)/LS	Ladder Support

Product Ref & Ordering Information

CB TO 6

- CB — 325 Sq. Cabinet Based Column
- TO — Tilt-Over Column
- 6 — Column Height in Metres

All WEC products are subject to ongoing development. Therefore, we reserve the right to make technical modifications without notice.
BRITANNIA HOUSE, JUNCTION STREET, DARWEN, LANCASHIRE, BB3 2RB. TEL: (01254) 700200. FAX: (01254) 873637. E-MAIL: all@wec.uk.net

Fixed & Tilt-Over Cabinet Base
CB & CBTO Range

Base and Windload Specification

Concrete Foundation Table *X x Y x Z*							
Model Ref	Height	Area of Country			Area of Town		
		A	B	C	A	B	C
CB3	3m	0.8x0.8x 0.4m Dp.	0.8x0.8x 0.4m Dp.	9x0.9x 0.45m Dp.	0.8x0.8x 0.4m Dp.	0.8x0.8x 0.4m Dp.	0.8x0.8x 0.4m Dp.
CB4 CBT04	4m	0.9x0.9x 0.45m Dp.	0.9x0.9x 0.45m Dp.	0.9x0.9x 0.45m Dp.	0.8x0.8x 0.4m Dp.	0.8x0.8x 0.4m Dp.	0.9x0.9x 0.45m Dp.
CB5 CBT05	5m	1.0x1.0x 0.5m Dp.	1.0x10x 0.5m Dp.	1.0x1.0x 0.5m Dp.	0 9x0.9x 0.45m Dp.	0.9x0.9x 0.45m Dp.	1.0x1.0x 0.5m Dp.
CB6 CBT06	6m	1.1x1.1x 0.55m Dp.	1.1x1.1x 0.55m Dp.	1.2x1.2x 0.6m Dp.	1.0x1.0x 0.5m Dp.	1.0x1.0x 0.5m Dp.	1.1x1.1x 0.55m Dp.
CB8 CBT08	8m	1.2x1.2x 0.6m Dp.	1.3x1.3x 0.65m Dp.	1.4x1.4x 0.7m Dp.	1.1x1.1x 0.55m Dp.	1.2x1.2x 0.6m Dp.	1.2x1.2x 0.6m Dp.

A minimum soil bearing pressure of 75 KN/m2 is assumed

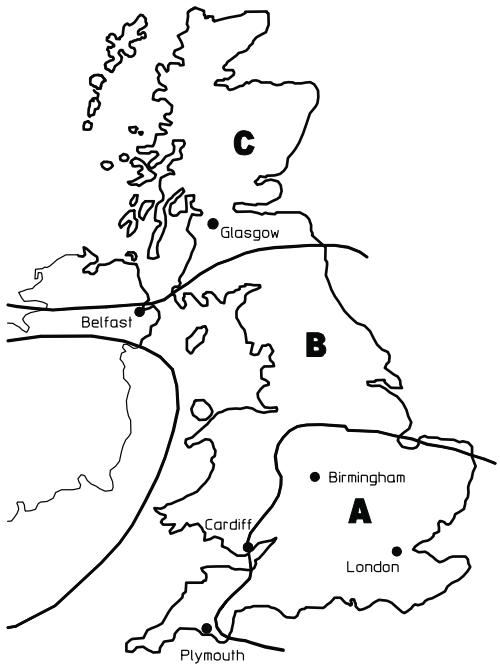

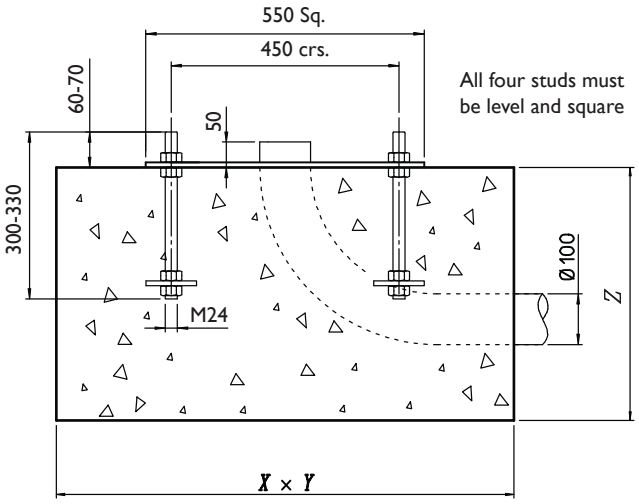

TC325 Root

fig. 1

TC325 Root Assembly

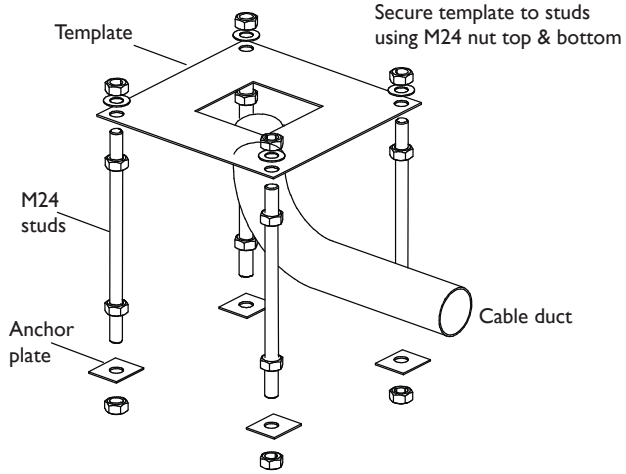

Installation Method

1. From the map, select location of installation
2. Excavate as per recommended area and depth
3. Assemble root base as shown in fig. 1
4. Insert root base into the hole ensuring that it is level and that the four studs protrude 60-70mm above the concrete foundation
5. Fit the cable duct if routing via the interior of the column. A plastic pipe of approximately 100mm outside diameter is recommended for this. Ensure this protrudes through the template by 50mm minimum.
6. Pour concrete ensuring that it is a mix of C35 to table 6 BS 8110 and then tamp down well
7. Fit the setting template over the four protruding studs, double-checking that they are level and that clear access can be gained to the cable duct if it is being used
8. Leave the concrete to cure for a minumum of 72 hours prior to attempting to erect the column
9. When fitting the column, ensure that the concrete base is in complete contact with the underside of the column and grout accordingly. Torque the nuts to 230-270 Nm (175-200 fl. lb.)
10. When the column has been fitted, protect the studs with a suitable protective coating. Denzo tape or similar is recommend for this

Foundation sizes are determined for three sets of wind speeds, which will cover most of the British Isles.

Area A = 44m/s (98mph)
Area B = 48m/s (107mph)
Area C = 52m/s (116mph)

Maximum gust speed is likely to be exceeded on average once every 50 years at 10m above the ground in open level country.

All WEC products are subject to ongoing development. Therefore, we reserve the right to make technical modifications without notice.
BRITANNIA HOUSE, JUNCTION STREET, DARWEN, LANCASHIRE, BB3 2RB. TEL: (01254) 700200. FAX: (01254) 873637. E-MAIL: all@wec.uk.net

Fixed & Tilt-Over Cabinet Base
TC, CB, TCTO, CBTO Accessories

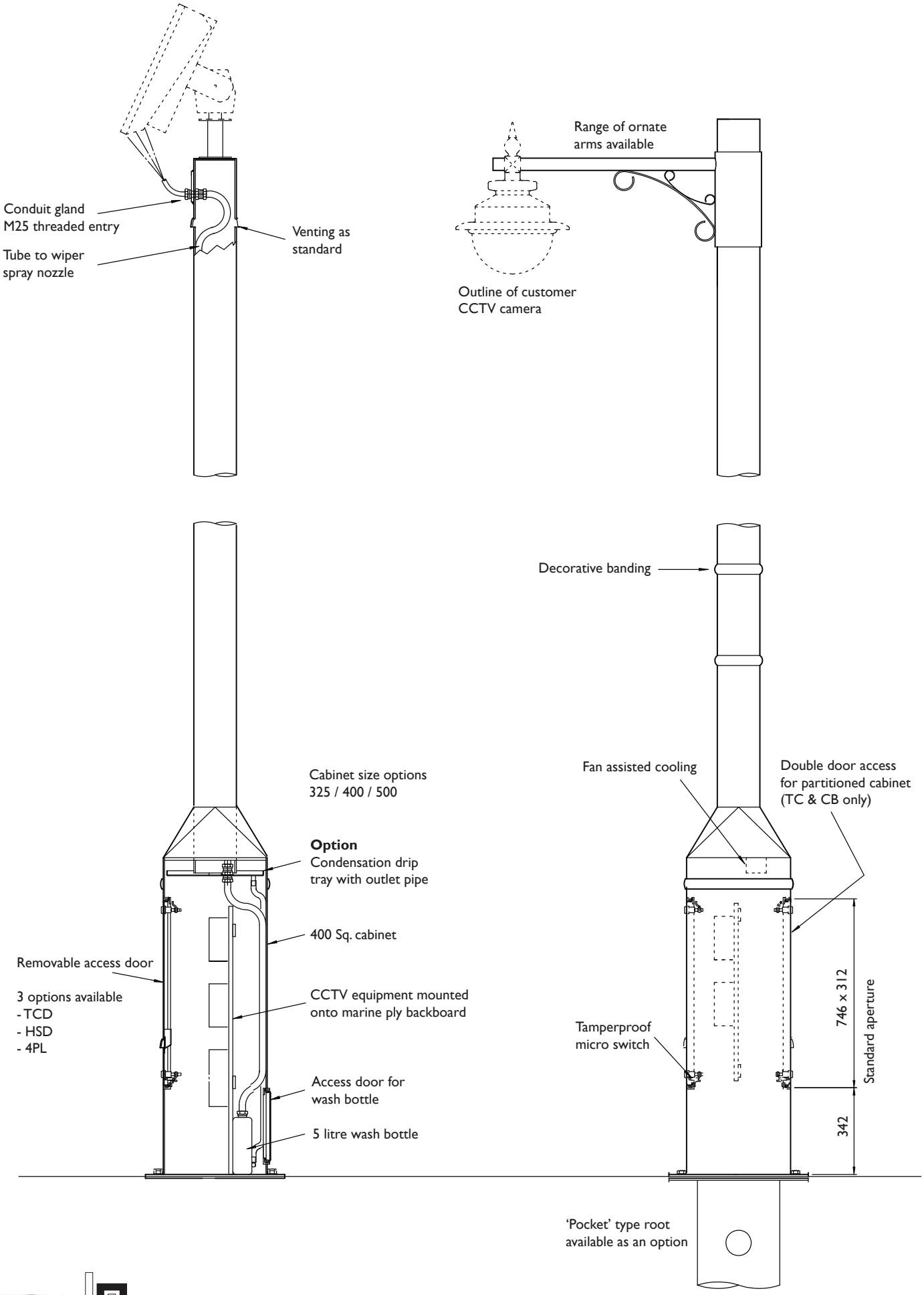

Fixed & Tilt-Over Cabinet Base
TC, CB, TCTO, CBTO Accessories

Optional Extras

Door Options

Moderate risk area
2 point locking

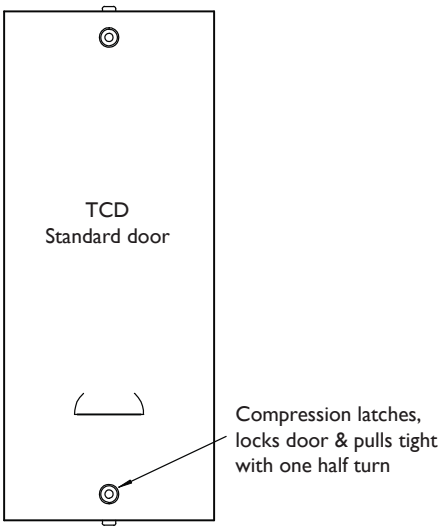

One key required

- Louvered door
- Close fitting and flush door
- Self grip rubber door seal
- Secure compression locks
- Earthing lugs

High risk area
3 point locking

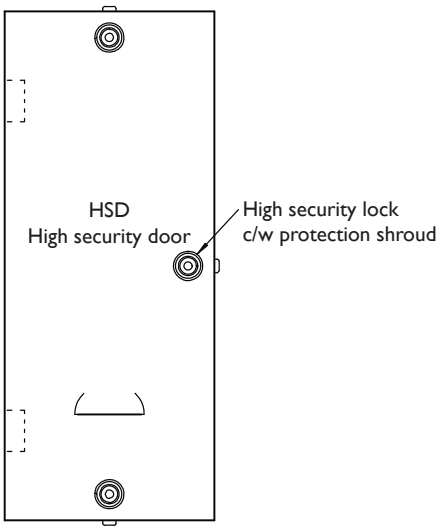

Two keys required

- Louvered door
- Close fitting and flush door
- Self grip rubber door seal
- 2 secure compression locks and 1 high security lock
- Earthing lugs
- Protection shrouds for each lock

Very high risk area
4 point locking

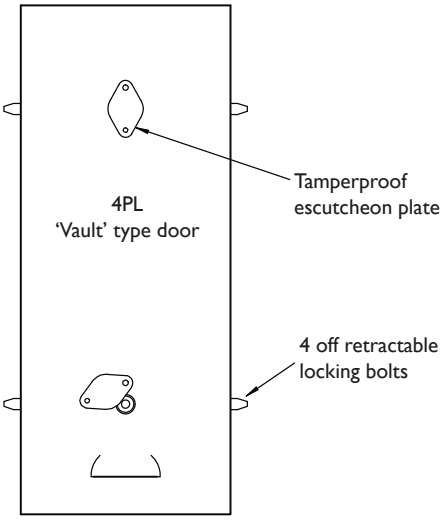

Three keys required

- Louvered door
- Close fitting and flush door
- 2 high security locks
- Earthing lugs
- Tamperproof escutcheons for each lock
- Stainless steel locking mechanism

All WEC products are subject to ongoing development. Therefore, we reserve the right to make technical modifications without notice.
BRITANNIA HOUSE, JUNCTION STREET, DARWEN, LANCASHIRE, BB3 2RB. TEL: (01254) 700200. FAX: (01254) 873637. E-MAIL: all@wec.uk.net