A

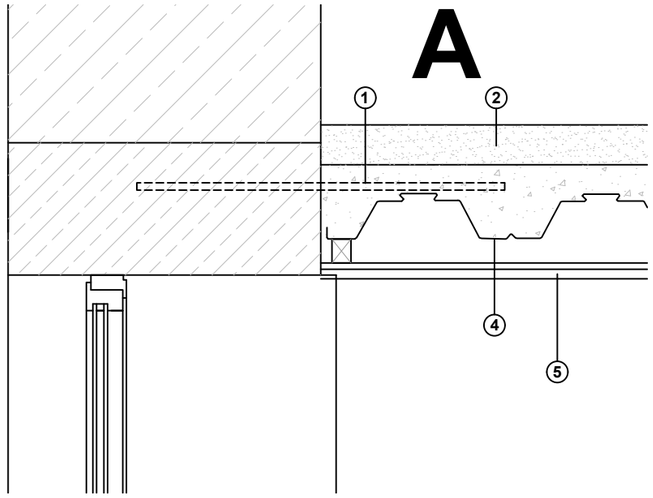

B-B

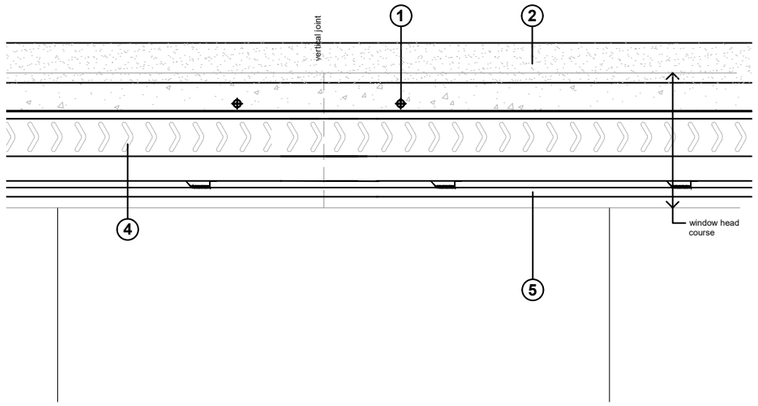

C

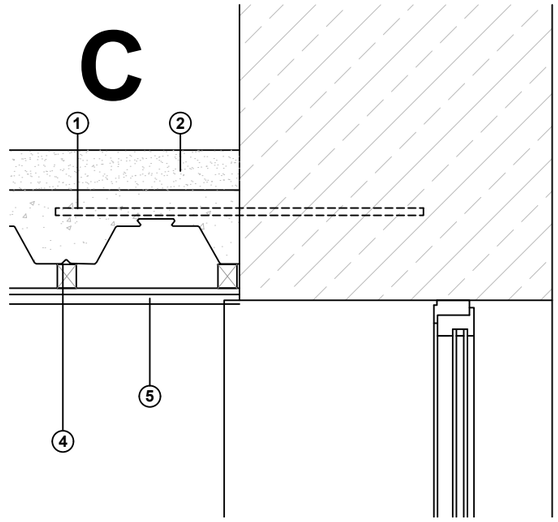

between floor beams

A

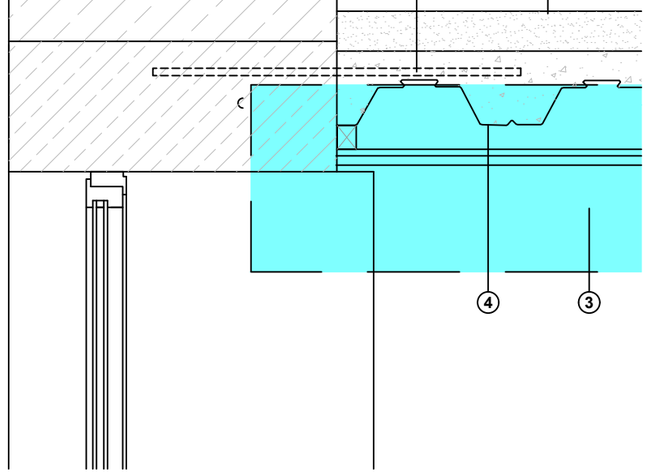

B-B

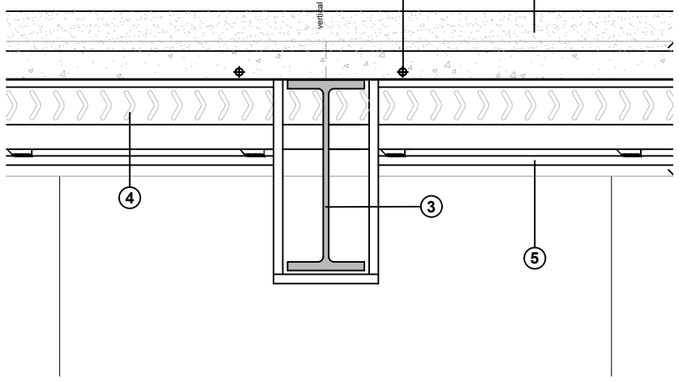

C

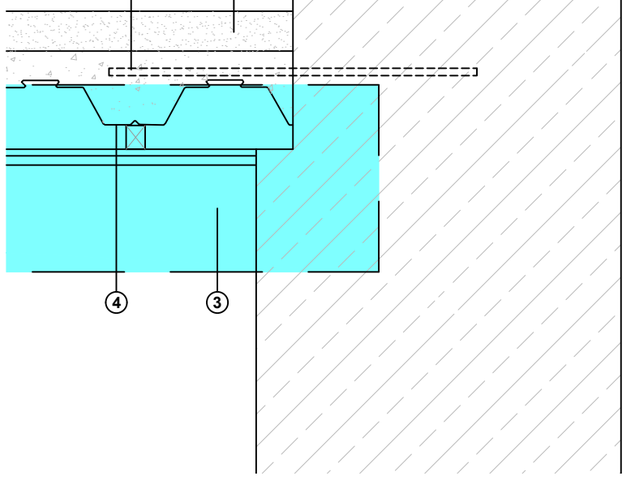

at floor beams

Proposed Wall restraint details
Sections 1:10

0.5m 1m

KEY

Steelwork in elevation

Steelwork in section

Copyright exist on the designs and information shown on this drawing. No part of this drawing can be reproduced without written confirmation of Heppenstalls. This drawing should only be used for the purpose was issued for and should not be used for construction unless it is marked for construction. Heppenstalls must be notified should any discrepancies be found.

Revision

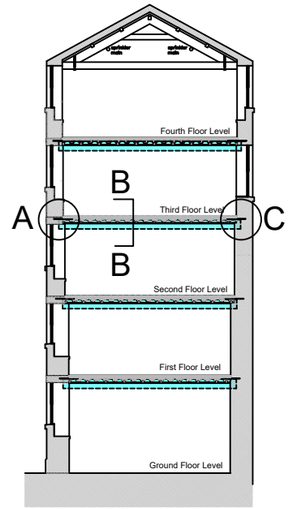

Key Section
1:200

1. 12mm dia. x 600mm long threaded bars, chemically anchored into wall and cast into composite floor, at 600mm centres.
2. 75mm screed with underfloor heating
3. New steel floor beams, provisionally 305x127x48 UB, with 30 minutes fire protection
4. Metal deck composite floor to support 2.5kN/sq.m live load
5. Sound resisting plasterboard ceiling on resilient bars via timber grounds to composite floor.

Client WILLIAM BROOKE BENEVOLENT FUND

Project
Armitage Bridge Mill - Building 29 - Loom Shop
Conversion to Wellness Centre

Drawing
Draft wall restraint details - V3

Number	Checked	
	Scale @ A3	Date
4366-06-05	1:10	07/2021

Planning

HEPPENSTALLS
Chartered Architects & Surveyors
RIBA
Architecture
Surveying
Planning
Project Management
RICS
Allisons buildings, 135 Armitage Road Milnsbridge, Huddersfield, HD3 4JY tel 01484 658411
projects@heppenstalls.net www.heppenstalls.net