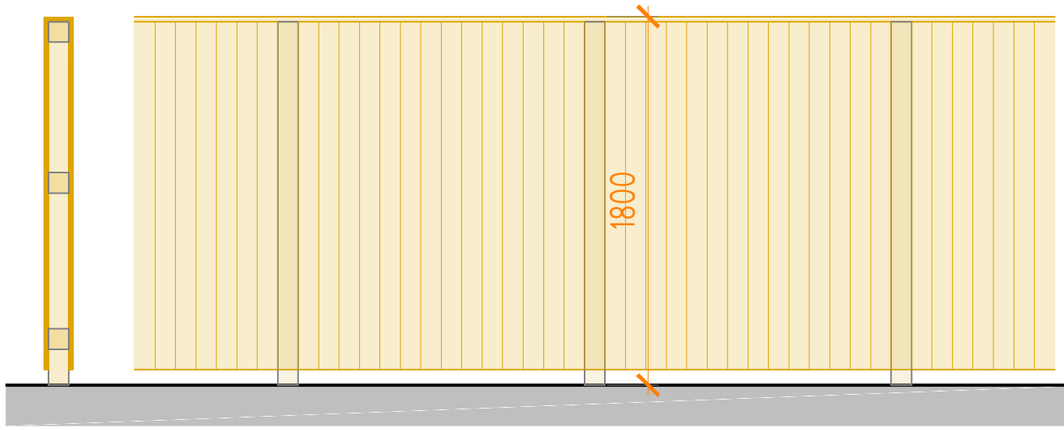


PROPOSED FENCE DETAILS.

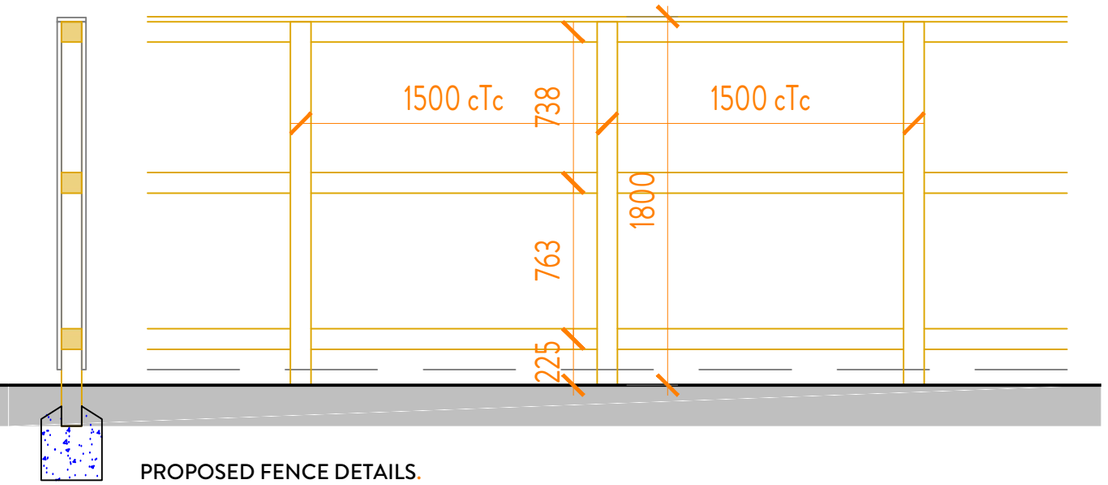


PROPOSED FENCE DETAILS.

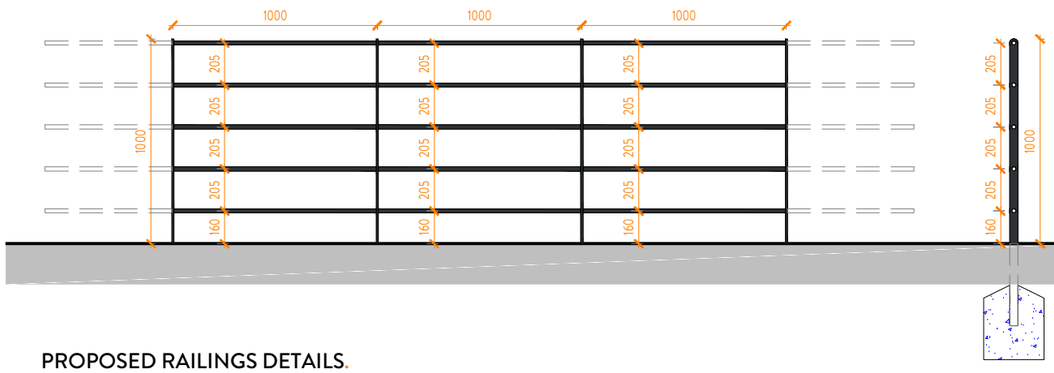


PROPOSED RAILINGS DETAILS.

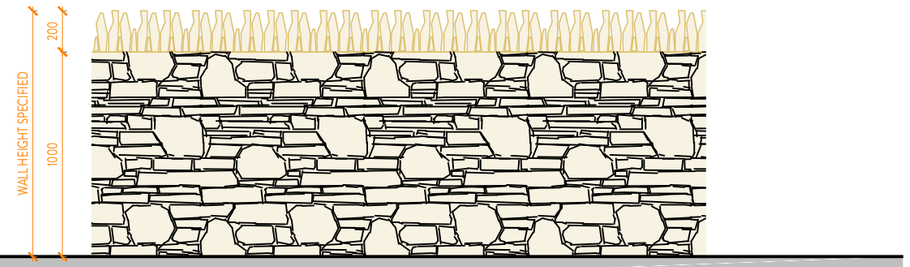


PROPOSED DRY STONE WALL DETAILS.

2021 Best of Houzz Service

BUILD 2021 Home Builder Awards

BUILD Architecture Awards 2019

NORTHERN DESIGN AWARDS FINALIST 2016

| REVISION | DESCRIPTION | DATE |
|---|---|---|
| - | - | - |
| - | - | - |
| - | - | - |
| - | - | - |
| - | - | - |
| - | - | - |
| - | - | - |
| - | - | - |
| - | - | - |
| - | - | - |

STATUS
PLANNING DRAWING

ORANGE DESIGN STUDIO.
ARCHITECTURAL PRACTICE

hello@orangedesignstudio.co.uk
59A, Huddersfield Road, Mirfield, WF14 8AA
**orangedesignstudio.co.uk**
**01924 650930**

COPYRIGHT © ORANGE DESIGN STUDIO LIMITED

PROJECT TITLE
YEW TREE FARM

DRAWING TITLE
BOUNDARY TREATMENT DETAILS

| SCALE | DRAWN | CHECKED | PROJECT REFERENCE |
|---|---|---|---|
| 1:200 | JH | JH | ODS_20/294 |
| PAPER SIZE | DWG NUMBER | DATE | REVISION |
| A3 | (20)004 | 25/3/21 | A |

CLIENT
RADCLIFFE DEVELOPMENTS (FARNLEY)