

REAR

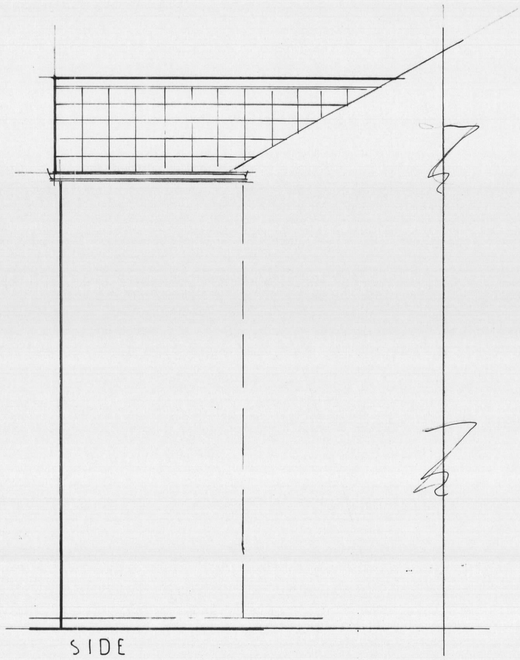

SIDE

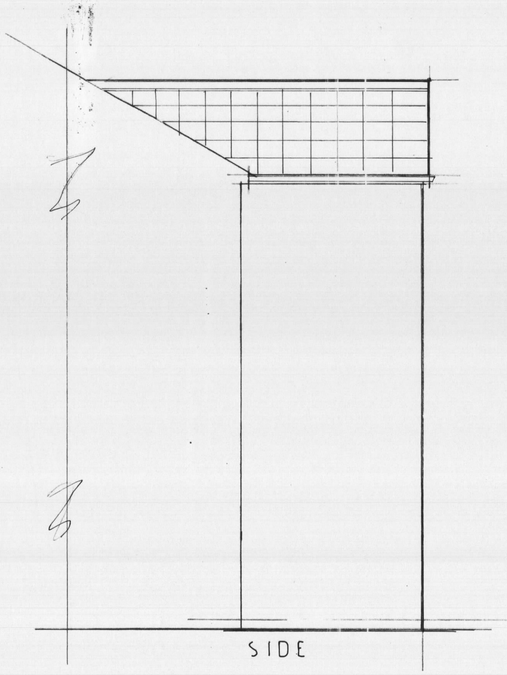

SIDE

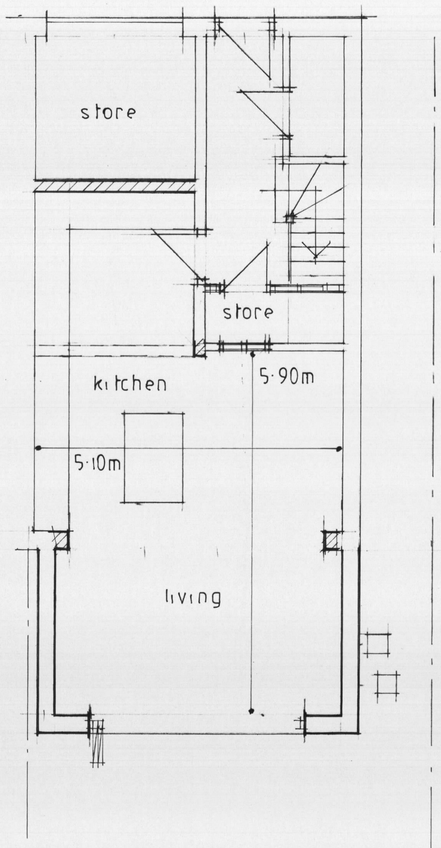

GROUND FLOOR

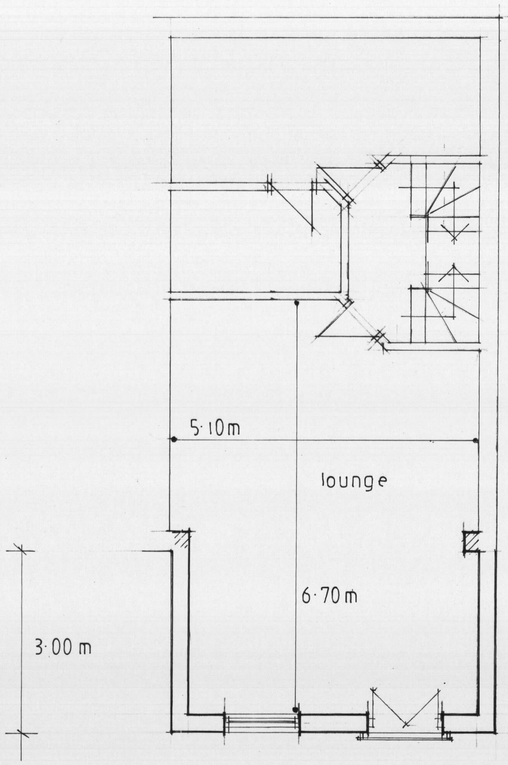

FIRST FLOOR

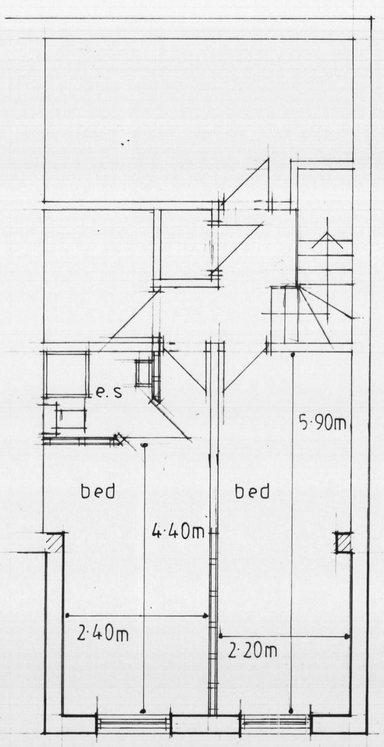

SECOND FLOOR

Notes :-

- ALL DIMENSIONS MUST BE CHECKED ON SITE PRIOR TO WORKS STARTING.
- DO NOT SCALE.
- THIS DRAWING AND DESIGN REMAINS THE COPYRIGHT OF J.A OLDROYD M.R.I.C.S AND MAY NOT BE REPRODUCED WITHOUT PERMISSION.
- ALL WORKS MUST BE CARRIED OUT IN ACCORDANCE WITH CURRENT BUILDING REGULATIONS, CODES OF PRACTICE, AND PLANNING OFFICERS REQUIREMENTS.
- ALL MATERIALS MUST COMPLY WITH CURRENT BRITISH STANDARDS IN SITUATION USED.

THIS IS A NOTIFIABLE PROJECT UNDER THE CONSTRUCTION & DESIGN REGULATIONS 2007. THE DEVELOPER MUST BY LAW INFORM THE LOCAL HEALTH & SAFETY EXECUTIVE AND ALSO OBTAIN THE SERVICES OF A C.D.M. CO-ORDINATOR.

Party Walls
The Part Wall Act etc. Act 1996 came into effect on 1st July 1997. If someone is planning to carry out building work which involves: work on an existing wall shared with another property; or new building on the boundary with a neighbouring property; or excavating near a neighbouring building, they should find out whether that work falls within the scope of the Act. If it does, they must serve the statutory notice on all affected owners. The government has produced an explanatory leaflet which is available from planning services.

A		
	Date	Revisions

J.A. OLDROYD & SONS LTD
CHARTERED BUILDING SURVEYOR
THE BARN, 3 PRIMROSE LANE
HIGHTOWN, LIVERSEDGE
WEST YORKSHIRE, WF15 6NS
TEL : 01274 865127
email: mr.oldroyd@yahoo.co.uk

Client
K. ADAMS

Address
63 MACAULAY RD
BIRKBY

Drawing Title
PROPOSED EXTN.

scale 1 : 50

date JUN '21 | drawn by

Drg No 21 | 127 | Rev