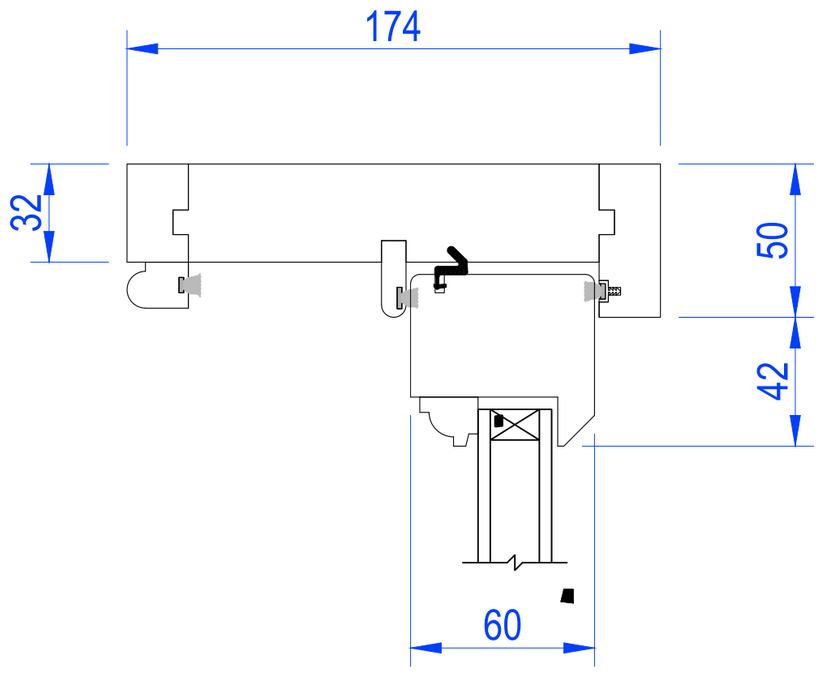

DETAIL ONE.
1:2

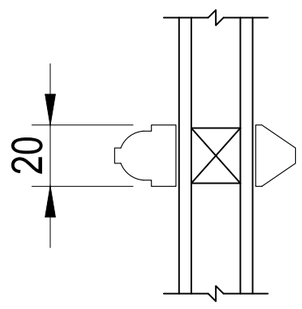

DETAIL TWO.
1:2

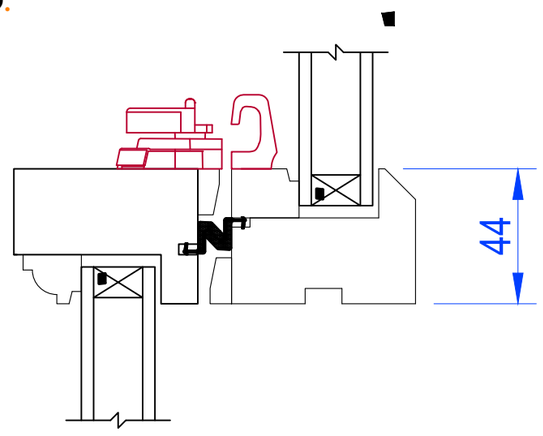

DETAIL THREE.
1:2

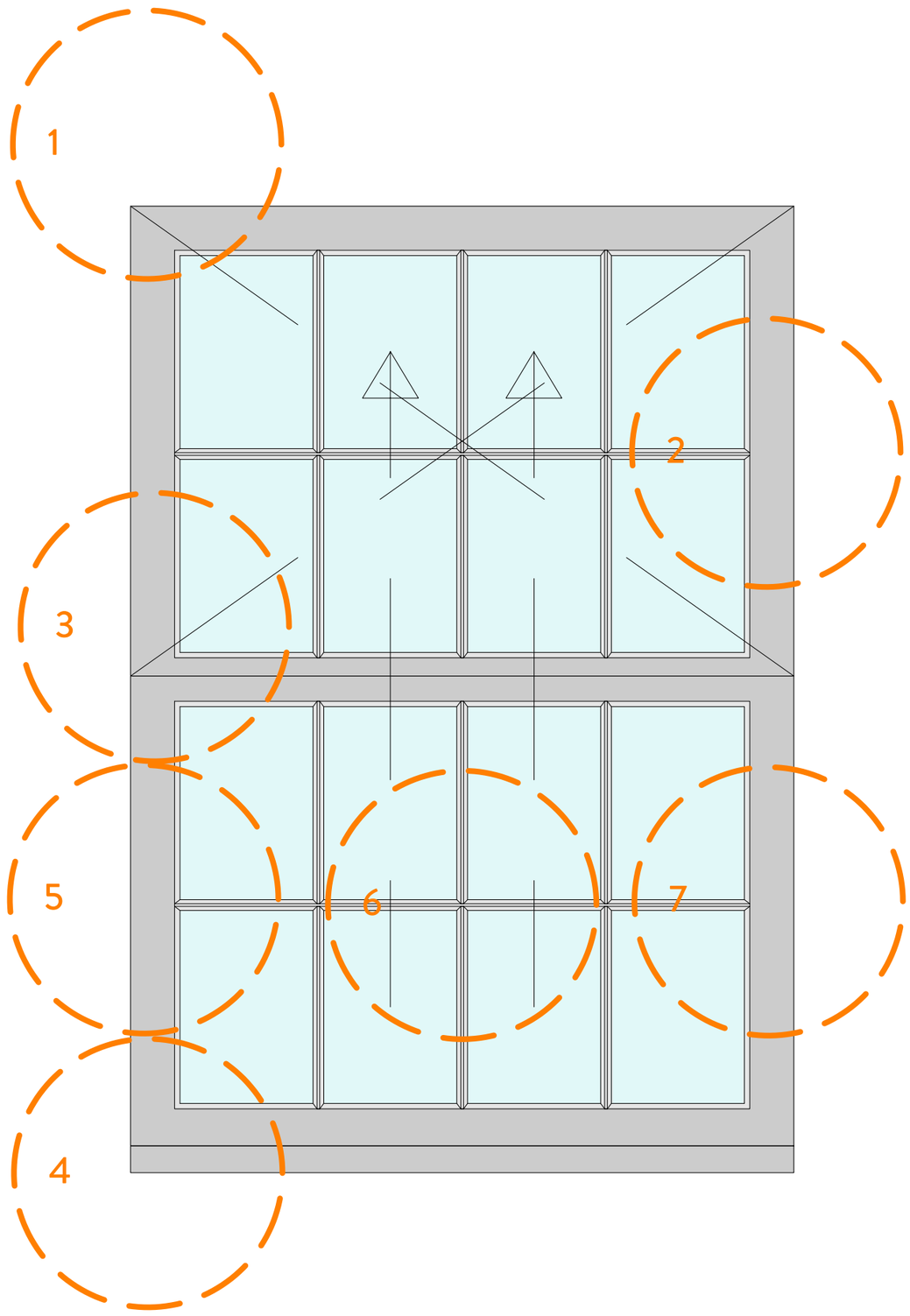

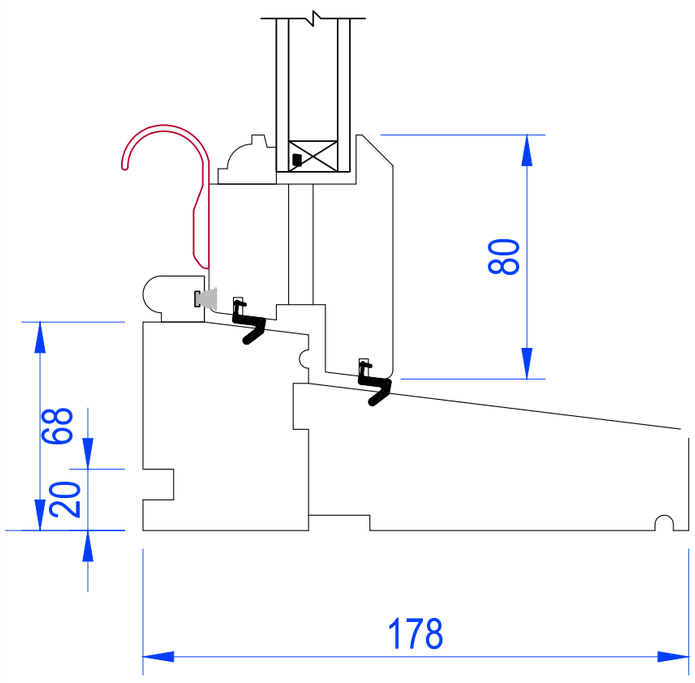

DETAIL FOUR.
1:2

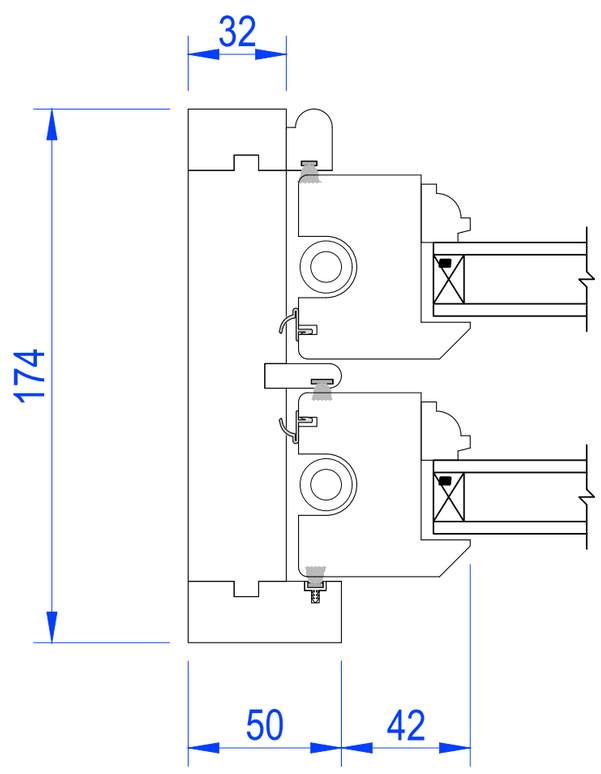

DETAIL FIVE.
1:2

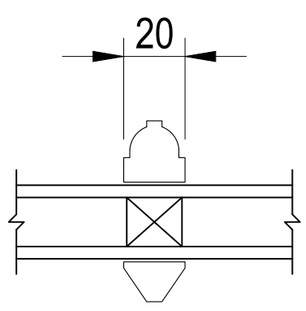

DETAIL SIX.
1:2

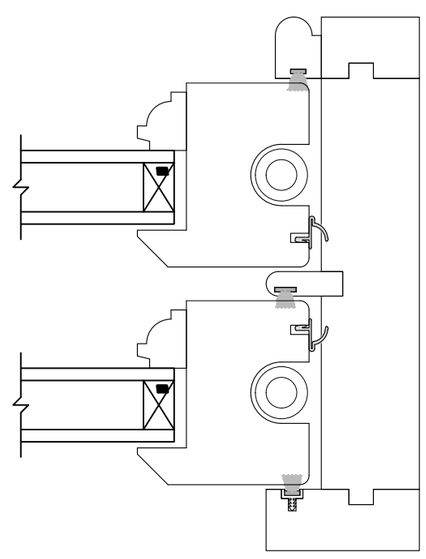

DETAIL SEVEN.
1:2

REVISION	DESCRIPTION	DATE
-	-	-
-	-	-
-	-	-
-	-	-
-	-	-
-	-	-
-	-	-
-	-	-
-	-	-
-	-	-
-	-	-

STATUS
PLANNING DRAWING

ORANGE DESIGN STUDIO.
ARCHITECTURAL PRACTICE

hello@orangedesignstudio.co.uk
59A, Huddersfield Road, Mirfield, WF14 8AA
orangedesignstudio.co.uk
01924 650930

COPYRIGHT © ORANGE DESIGN STUDIO LIMITED

PROJECT TITLE
HOLMDENE

DRAWING TITLE
WINDOW DETAILS

SCALE	DRAWN	CHECKED	PROJECT REFERENCE
1:10	EG	JH	ODS 20/247
PAPER SIZE	DWG NUMBER	DATE	REVISION
A2	(72)002	16/11/20	/

CLIENT
MR J WAINWRIGHT