ARBORICULTURAL METHOD STATEMENT
to BS 5837:2012
at
39b Water Royd Lane
Mirfield
West Yorkshire
WF14 9SF

Client:
Paul Goff

Client Address:
39b Water Royd Lane
Mirfield
WF14 9SF

JCA Ref:
16639a/TT

JCA Limited
Arboricultural & Ecological Consultants

Contents

1. Introduction 3

2. Tree Works Prior, During and Post Construction 4

3. The Protective Barrier Prior, During and Post Construction 6

4. Construction Phase 8

4.1 Demolition Works 8
4.2 Ground Level Changes 8
4.3 Construction of New Buildings 8
4.4 Excavations and Services 8
4.5 Location of the Site Compound 9

5. Timescale of Works 10

6. Relevant Contact Details 11

Appendix 1: Tree Works Schedule 13

Appendix 2: Protective Barrier 14

Appendix 3: Utilities and Drainage 16

Appendix 4: Tree Protection Plan 18

Appendix 5: The Proposals; A Diagrammatic Representation 19

© JCA Limited 2020

1. Introduction

1.1 Purpose of the Method Statement

1.1.1 This Arboricultural Method Statement has been prepared to ensure good practice in the protection of retained trees during the development at **39b Water Royd Lane** in **Mirfield.**

1.2 Terms of Reference

1.2.1 JCA Limited is instructed by **Paul Goff** to prepare an Arboricultural Method Statement for the proposed development, based on our arboricultural report dated 11th December 2020 (JCA Ref: **16639/TT**). The arboricultural survey and report conforms to the most recent specifications outlined in BS 5837: 2012 *Trees in relation to design, demolition and construction - Recommendations*.

1.2.2 It is proposed to add a second storey and new roof to the southern section of the existing dwelling, which at present is a single storey structure. It is not proposed to extend the width/length of this part of the property and the existing footprint is to be retained.

1.2.3 A diagrammatic representation of the proposals can be viewed at **Appendix 5**.

1.3 Status of the Method Statement

1.3.1 This Arboricultural Method Statement should be included as part of the specification and schedule of works issued to the building contractor and can form part of the contract.

1.3.2 This Arboricultural Method Statement should be available on site for inspection by the local authority, contractors and other relevant persons.

2. Tree Works Prior, During and Post Construction

2.1 Tree Works Prior to Construction

2.1.1 Prior to any construction activity, the first operation on site will be the undertaking of the necessary arboricultural works, as described at **Appendix 1**.

2.1.2 The tree works include:

- The removal of **T1**, for arboricultural reasons.
- The pruning of **T3**, for arboricultural reasons and to accommodate the proposals.

2.2 Tree Works During Construction

2.2.1 In this case, no above ground tree works are envisaged to be required during the construction phase.

2.2.2 The installation of temporary protective fencing and ground protection, to create a Construction Exclusion Zone (CEZ), will protect the tree stems and rooting zones during the construction phase. All persons on site must be aware of limitations that apply within the CEZ (please refer to **Section 3.1.3**).

2.2.3 Additional care is required to avoid any damage being caused to the tree branches within the canopies, which will extend beyond the temporary protective fencing.

2.2.4 If any trees on site are damaged, this must be immediately reported to JCA to agree on appropriate remedial action. Contact numbers for all parties can be found at **Section 6**.

2.3 Tree Works Post Construction

2.3.1 When the construction phase is complete and when the temporary protective fencing and ground protection has been removed, some minor remedial works may be required.

2.3.2 Any post construction remedial works must be applied for via a tree work application submitted to the Local Planning Authority.

2.3.3 No post construction remedial works are to be carried out on the trees until permission has been granted by the Local Planning Authority.

2.4 Recommendations For Tree Works

2.4.1 All work must be undertaken to BS 3998: 2010 - *Recommendations for tree work* and carried out by qualified, experienced and, ideally, Arboricultural Association approved contractors who must be adequately insured.

2.4.2 Any defects seen by a contractor or the client that were not apparent to the consultant must be brought to the attention of JCA immediately.

2.4.3 No liability can be accepted by JCA in respect of the trees unless the recommendations of this Method Statement are carried out under our supervision.

3. The Protective Barrier Prior, During and Post Construction

3.1 Protective Barrier Prior to Construction

3.1.1 The installation of the temporary protective barrier will be the very first job to be undertaken on site following the completion of the tree works (as detailed in **Section 2.1**). This barrier will comprise of protective fencing and ground protection, as detailed below and in **Section 3.2**.

3.1.2 The protective fencing must be constructed in accordance with BS 5837: 2012 *Trees in relation to design, demolition and construction - Recommendations* and will be located as shown on the Tree Protection Plan at **Appendix 4**. Due to site restrictions, the temporary fencing will safeguard the tree stems to make a Construction Exclusion Zone (CEZ); **this area is to be considered a restricted area; no pedestrians, vehicles, equipment or machinery are allowed within the CEZ and the storage of materials is not permitted, unless specified within this Method Statement**.

3.1.3 Due to the nature of the proposals, the site restrictions, and as the fencing will be positioned close to the tree stems, it is advised that the protective fencing comprise of weld mesh panel fencing, situated in rubber feet. The panels will be joined together using a minimum of two anti-tamper couplers. Please refer to **Appendix 2 (Fig 1)** for protective fencing details.

3.1.4 Once the fencing is installed, waterproof signs with the sentence '*Protected tree zone, no storage or operations within this are*a' are to be placed at 3m intervals to ensure that all personnel are aware of the restrictions that apply to the cordoned off area. A prepared sign is available at **Appendix 2**.

3.2 Ground Protection

3.2.1 Where it is not possible to enclose the RPA of the trees with protective fencing (see the area highlighted in **blue** on the Tree Protection plan at **Appendix 4**), it will be necessary to lay appropriate ground protection. This, in combination with the fencing described in **Section 3.1**, will comprise the protective barrier.

3.2.2 The ground protection will be installed prior to construction and retained until the material completion of development. The purpose of the ground protection is to enable site traffic to pass over the RPAs of trees, whilst minimising compaction and disturbance of the underlying soil which can lead to root asphyxiation and damage.

3.2.3 As only pedestrian traffic is required to pass over the RPA, wooden scaffold boards laid over a layer of sharp sand or woodchip (no less than 100mm in depth) will suffice.

3.3 Checking the Protective Barrier Prior to Construction

3.3.1 Once installed, the appointed arboriculturalist will be invited on site to inspect the protective fencing and ground protection, ensuring that it is located in the correct position and that it has been constructed in accordance with this Method Statement. No other work, including soil stripping, excavation, or the bringing onto site of materials or machinery, shall commence until the barrier is installed and confirmed to be acceptable by the appointed arboriculturalist.

3.3.2 It is important that the protective fencing and ground protection be checked by the LPA or an arboricultural consultant prior to any construction works being carried out on site. **If at any time during construction the protective fencing or ground protection is not correctly installed, or if it does not comply with BS 5837: 2012, this could result in damage being caused to trees and consequently, a stop notice may be served by the LPA.**

3.4 Protective Barrier During Construction

3.4.1 No operations shall take place which require the removal of part of the protective barrier without prior agreement with the Local Planning Authority.

3.4.2 The protective barrier must be inspected for faults or damage by the site manager or other responsible named person on a regular basis and a written record kept. Any faults or defects must be repaired or replaced as soon as is reasonably practicable. Details of the site manager and relevant contact details can be found at **Section 7**.

3.5 Removal of the Protective Barrier

3.5.1 When the development phase is complete and the main site machinery has been removed, the protective barrier may be dismantled and removed from site.

3.5.2 It should be noted the same restrictions apply to all RPAs as the CEZ (please refer to **Section 3.1.2**).

4. Construction Phase

4.1 Demolition Works

4.1.1 In order to meet the needs of this proposal, the removal of the top section/roof of the existing single storey section of the dwelling will require removing.

4.1.2 To prevent damage to the adjacent trees during this operation, no works will commence until the protective measures are installed.

4.1.3 It is important that any damage to the tree canopies be avoided during this operation. As such, this work must be undertaken in a cautious fashion, using hand tools were practical, and ideally under the supervision of an arboricultural consultant.

4.2 Ground Level Changes

4.2.1 No ground level changes are required to accommodate the proposals. As such no mitigation actions are considered necessary.

4.3 Construction of New Buildings

4.3.1 The proposals require an additional storey/roof to be added to the existing part of the dwelling, the actual building footprint is to remain the same. As such, no excavations are required within the RPA of the trees for this project.

4.4 Excavations and Services

4.4.1 Precise details on service routes are unavailable at this time although it is proposed to use the existing service runs. As such, no utilities will need to be laid within the RPA of the retained trees.

4.4.2 If, for whatever reason, incursions into the RPAs are required, the consulting arboriculturalist and/or the LPA must be consulted immediately, to prevent a breach of planning conditions and/or damage to retained trees.

4.4.3 Guidance and methodologies on the installation of underground services whilst minimising damage to tree roots is provided at **Appendix 3**.

4.5 Location of the Site Compound

4.5.1 The site compound, typically including the site office, mess facilities, toilets, storage of materials and parking, must be located away from, and outside the RPA of retained trees.

4.5.2 Those areas designated for the storage and/or mixing of chemicals, including petrol, diesel and oils must also be located away from, and outside the RPA of retained trees. Such areas should be constructed with consideration to, and contingencies for, the occurrence of spillages, preventing the leaching of chemicals into unprotected, open ground.

© JCA Limited 2020

5. Timescale of Works

5.1.1 The timescales for arboricultural requirements are summarised below:

Timescale	Action	✓	Initial
Stage 1	All requirements listed in the planning consent are approved by the Local Authority planning office.		
Stage 2	Undertake the tree works (as detailed at **Appendix 1)**.		
Stage 3	Install the temporary protective fencing around the trees (as detailed at **Appendix 2** and as represented by a **purple** line on the Tree Protection Plan at **Appendix 4**).		
Stage 4	Install ground protection within the RPAs of the trees where these are not fully protected by the fencing (as detailed in **Section 4** and as indicated by the **blue** coloured area on the Tree Protection Plan at **Appendix 4**).		
Stage 5	Have the Local Planning Authority or Arboricultural Consultant inspect the fencing and ground protection measures **prior** to any on site construction. Once inspected, the protective fencing and ground protection must not to be moved or breached.		
Stage 6	Undertake the demolition of the existing roof/upper floor of the building (as detailed in **Section 4**), taking care to avoid damage to the adjacent tree branches. **Arboricultural supervision advised during this operation.**		
Stage 7	Undertake the construction of the new upper floor/roof taking care to avoid causing any damage to the adjacent tree branches.		
Stage 8	Following the completion of the construction phase and when all site traffic and machinery has left, the protective fencing and ground protection can be removed.		

6. Relevant Contact Details

Contact Name	Organisation/Detail	Contact Number
Toby Thwaites Arboricultural Consultant	JCA Limited	01422 376335
Joe Robertson Tree Officer	Kirklees Council	01484 221000
TBC Site Manager	TBC	TBC
TBC Architect	TBC	TBC

Appendices

Tree Ref.	Age Common Name *Botanical Name*	Height (m)	Crown Height (m)	Height (m) and Direction of the Lowest Branch	Diameter (cm)	Crown Spread N W E S	Observations	Recommendations Priority	Physiological Condition	Structural Condition	Amenity Value	NHBC Water Demand	Life Expectancy (yrs)	Retention Category
T 1	Early Mature Hawthorn *Crataegus monogyna*	7	2.5	3 N	35 #	0 1 0 6.7	Single-stemmed and leaning over the adjacent driveway with an unbalanced crown. Growing through/occluding the wooden boundary fence with the canopy biased to the south/south-east. A vertical crack with minor decay is present in the lower stem and occasional pruning wounds/cavities were noted. Cracks were observed in the boundary stone wall adjacent to this tree. This tree has no long term future.	Remove. Moderate	GOOD	FAIR	MOD	HIGH	<10	U
T 2	Mature Horse Chestnut *Aesculus hippocastanum*	15.5	1.5	5 E	85	6 4.3 6.5 6	Growing close to the wooden boundary fence; a full detailed inspection of the eastern side of the stem was not possible. Single-stemmed and vertical with a slightly unbalanced crown, which overhangs the adjacent footpath, road and a street lamp. Bark necrosis and epicormic growth indicates Bleeding Canker of Horse Chestnut. The canopy is close to the existing house but is not overhanging this.	Annually monitor the health and condition of the tree due to the presence of Bleeding Canker of Horse Chestnut. Moderate	FAIR	FAIR	HIGH	MOD	20+	B 1
T 3	Mature Sessile Oak *Quercus petraea*	14	3	6 E	54	9.3 7.2 7 4	Growing within the garden area and overhanging the property and the adjacent footpath, road and a street lamp. Deadwood, a hanging branch, wind snapped branches and tear wounds and occasional pruning wounds noted within the canopy.	Remedial prune/crown clean. Aerially inspect the canopy whilst undertaking these works. Light pruning works required to accommodate the proposals. High	GOOD	GOOD	HIGH	HIGH	40+	B 1
H 4	Semi Mature Privet *Ligustrum ovalifolium*	To 2.3	0+	n/a n/a	<10	See Plan	A boundary hedge providing screening from the adjacent footpath and road. It has recently been reduced.	No action required. n/a	GOOD	GOOD	LOW	NO DATA	20+	C 2

Appendix 2: Protective Barrier

A2.1 Figure 1: An example of above-ground stabilisation systems. To be used where there is hard surfacing which is to be retained.

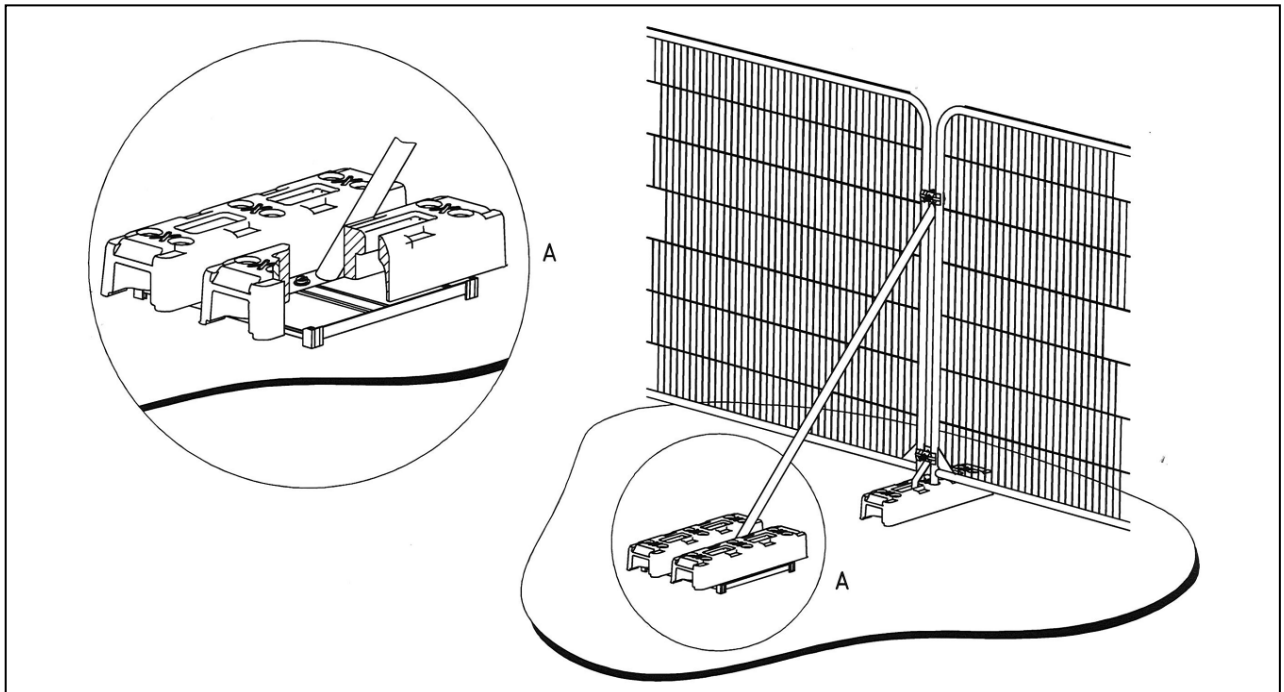

b) Stabilizer strut mounted on block tray

TREE PROTECTION ZONE

KEEP OUT!

TREES ENCLOSED BY THIS FENCE ARE PROTECTED
BY STRICT PLANNING CONDITIONS

ANY DAMAGE CAUSED TO THESE TREES MAY
RESULT IN **CRIMINAL PROSECUTION**

RESTRICTED AREA:

- THE PROTECTIVE FENCE MUST NOT BE MOVED OR BREACHED
- NO PERSON, MACHINERY, VEHICLE OR PLANT IS PERMITTED WITHIN THE TREE PROTECTION ZONE
- NO MATERIALS SHALL BE STORED WITHIN THE TREE PROTECTION ZONE
- NO EXCAVATIONS ARE PERMITTED WITHIN THE TREE PROTECTION ZONE
- NO SPOIL IS TO BE DEPOSITED WITHIN THE TREE PROTECTION ZONE
- NO FIRES ARE TO BE LIT WITHIN THE TREE PROTECTION ZONE

REPORT TREE DAMAGE TO JCA LIMITED ON
01422 376 335

Appendix 3: Utilities and Drainage

A3.1 Over-ground services should be routed away from areas where they are likely to interfere with the crowns of trees. Similarly any landscaping should take account of over-ground services and mature tree size.

A3.2 Underground services must be routed outside the RPA of retained trees, unless otherwise specified within this report. NJUG Volume 4 Issue 2 (on the next page) is a set of accepted guidelines for installing services in the proximity of trees. Please note that this is not a substitute for site-specific advice by an arboriculturalist and consultation should be made wherever incursions of RPAs are envisaged. The contents of this report, specifically **Section 4.5**, supersede the set of guidelines on the next page, which are only included for reference.

The National Joint Utilities Group

NJUG Guidelines for the Planning, Installation and Maintenance of Utility Apparatus in Proximity to Trees – Issue 2

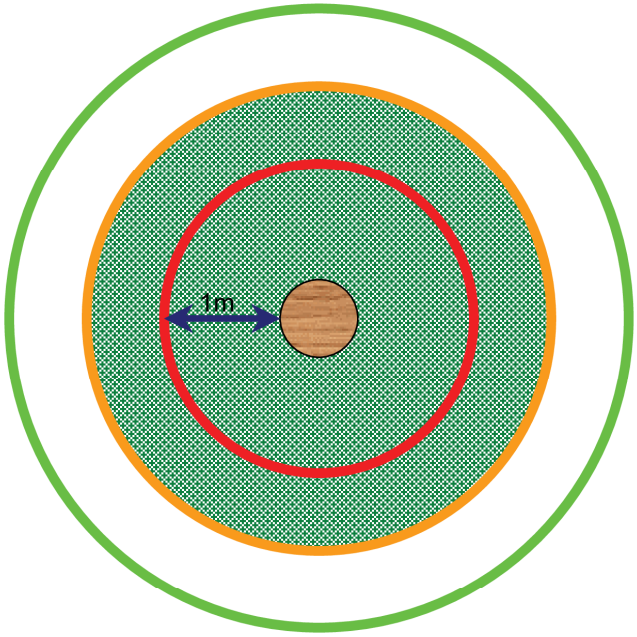

TREE PROTECTION ZONE

Key to Diagram

Trunk of Tree

Spread of canopy or branches

PROHIBITED ZONE – 1m from trunk. Excavations of any kind must not be undertaken within this zone unless full consultation with Local Authority Tree Officer is undertaken. Materials, plant and spoil must not be stored within this zone.

PRECAUTIONARY ZONE – 4 x tree circumference. Where excavations must be undertaken within this zone the use of mechanical excavation plant should be prohibited. Precautions should be undertaken to protect any exposed roots. Materials, plant and spoil should not be stored within this zone. Consult with Local Authority Tree Officer if in any doubt.

PERMITTED ZONE – outside of precautionary zone. Excavation works may be undertaken within this zone however caution must be applied and the use of mechanical plant limited. Any exposed roots should be protected.

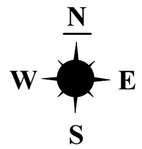

Appendix 4: Tree Protection Plan

ADDRESS: 39b Water Royd Lane, Mirfield, West Yorkshire, WF14 9SF.
JCA REF: 16639a/TT

SCALE: 1:200	PAPER SIZE : A2

	TREE TO BE RETAINED
	TREE TO BE REMOVED
	STEM OF TREE TO BE RETAINED
	STEM OF TREE TO BE REMOVED
	ROOT PROTECTION AREA (RPA)
	AREA OF RPA NOT ENCLOSED BY THE TEMPORARY PROTECTIVE FENCING; GROUND PROTECTION REQUIRED
	PROTECTIVE FENCE LINE (CEZ)
	SECTION OF THE EXISTING DWELLING WHERE AN ADDITIONAL STOREY IS TO BE ADDED

JCA Limited
Arboricultural & Ecological Consultants

An example of an above-ground stabilizing system

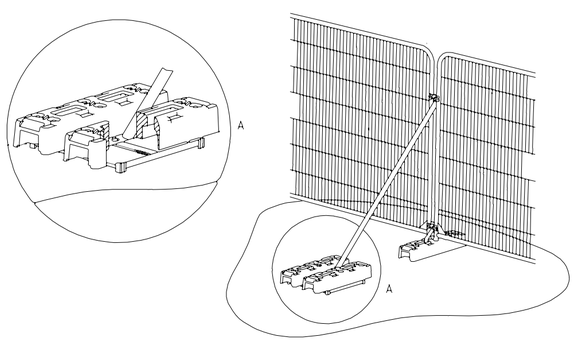

A stabilizer strut mounted on a block tray

THIS PLAN IS TO BE PRINTED IN COLOUR AND READ IN CONJUNCTION WITH THE JCA ARBORICULTURAL REPORT (JCA REF: 16639a/TT)

TREE PROTECTION MEASURES

THE ROOT PROTECTION AREA (RPA) INDICATES THE LIKELY ROOTING ZONE OF A TREE.

UNLESS OTHERWISE STATED IN THE ARBORICULTURAL METHOD STATEMENT, THIS AREA NEEDS TO REMAIN UNDISTURBED.

TO ACHIEVE THIS, PROTECTIVE FENCING WILL BE INSTALLED TO ENCLOSE THE RPA TO MAKE A CONSTRUCTION EXCLUSION ZONE (CEZ);

THIS AREA IS TO BE CONSIDERED A RESTRICTED AREA; NO PEDESTRIANS, VEHICLES, THE STORAGE OF MATERIALS, EQUIPMENT OR MACHINERY ARE ALLOWED WITHIN THE CEZ, UNLESS SPECIFIED WITHIN THE ARBORICULTURAL METHOD STATEMENT.

WHERE IT IS NOT POSSIBLE TO ENCLOSE THE RPA WITH THE PROTECTIVE FENCING, GROUND PROTECTION MEASURES WILL NEED TO BE LAID TO MINIMIZE ANY GROUND COMPACTION AND ANY DISTURBANCE TO THE UNDERLYING SOIL.

THE PROTECTIVE BARRIER WILL BE INSTALLED PRIOR TO ANY CONSTRUCTION ACTIVITIES TAKING PLACE AND WILL BE RETAINED IN PLACE UNTIL THE MATERIAL COMPLETION OF DEVELOPEMNT.

IT IS IMPORTANT THAT THE PROTECTIVE BARRIER IS CHECKED BY THE LPA OR THE ARBORICULTURAL CONSULTANT PRIOR TO ANY CONSTRUCTION WORKS BEING CARRIED OUT. IF THE TREE PROTECTION MEASURES ARE NOT CORRECTLY INSTALLED OR IF THEY DO NOT COMPLY WITH BS 5837: 2012, THIS COULD RESULT IN DAMAGE BEING CAUSED TO TREES AND CONSEQUENTLY A STOP NOTICE MAY BE SERVED BY THE LPA.

Appendix 5: The Proposals; A Diagrammatic Representation

front elevation

side elevation

side elevation

rear elevation

I hope that this report provides all the necessary information, but should any further advice be needed please do not hesitate to contact the author.

Signed

.....

Toby Thwaites *BSc. (Hons), H.N.D. Arboriculture, MArborA.*

14th December 2020

For and on behalf of ***JCA Ltd***

Registered Office:

Unit 80
Bowers Mill
Branch Road
Barkisland
Halifax
HX4 0AD

Tel. 01422 376335
Fax. 01422 376232
Email: jon@jcaac.com

www.jcaac.com

Report printed on recycled paper

JCA Ltd. Arboricultural and Ecological Consultants
Professional Tree and Ecology Advice nationwide

ARBORICULTURAL SERVICES

Guidance for Architects and Developers

- British Standard 5837 Tree Surveys
- Arboricultural Implication Assessments (AIA)
- Arboricultural Method Statements (AMS)

Advice for Engineers, Loss Adjusters and Insurers

- Tree Surveys for Subsidence
- Heave Assessment
- Tree Root Identification

Advice for Local Authorities and Social Housing

- Tree Safety Surveys
- Specialist Decay Detection
- Landscape and Orchard Design

Tree Advice for the Legal Profession

- Subsidence Litigation
- Personal Injury and Accident Investigation
- Expert Witness, Planning Inquiries and Appeals

Veteran Tree Management

- Ancient Woodland Management
- Veteran Tree Management

Tree Health and Pest and Disease Management

- Pest and Disease Surveys
- Tree Health Checks
- Disease Mitigation and Control

ECOLOGICAL SERVICES

Ecological Pre-Planning Services

- Phase 1 Habitat Surveys
- Great Crested Newt eDNA Sampling
- Protected Species: Bat, Wintering and Nesting Bird, Badger, Amphibian, Otter, Water Vole, White-Clawed Crayfish, Dormice and Reptile Surveys.
- Preparation for Environmental Impact Assessment (EIA)
- Invasive Species Surveys
- Code for Sustainable Homes

Ecological Post-Planning Services

- Biodiversity Enhancement Plans
- Protected Species Mitigation
- Ecological Management (Bat and Bird box installation and inspection)

HEAD QUARTERS:

Unit 80 Bowers Mill,
Branch Road,
Barkisland,
Halifax, HX4 0AD.

Tel: 01422 376335
Mobile: 07778 391986
Email: jon@jcaac.com
Website: www.jcaac.com

Company Reg No. 05005041
VAT No. 686 4674 78