

Arboricultural Method Statement Report

Prepared for:

Mr T Farooq
57 Hall Lee Fold
Huddersfield
HD3 3NX

Date of report: 12th December 2020

Reference: OWA0166 AMS

© Copyright 2020

oneworld arboriculture
Flora Harding

Table of Contents **Pg.**

1.0 Introduction……..3

1.1 Report Brief……3

1.2 Relevant Background Information……..4

1.3 Purpose of the Report…….4

1.4 Copyright……4

2.0 Sequence of Works……5

2.1 Tree Works Prior to Demolition and Construction……..6

2.1.1 Recommendations for Tree Works……6

2.1.2 Protected Species……6

2.2 Tree Works……..6

2.3 Protective Fencing ……8

2.4 Ground Protection……11

2.5 Construction of the new driveway……13

2.6 De-construction phase – Removal of the existing conservatory …..13

2.7 Construction of the new extension……13

2.8 Removal of Protective Fencing……14

2.9 Other Tree Protection Measures……14

3.0 Other Tree Works ……15

4.0 Liaison with the Tree Officer……16

5.0 Post Construction Tree Care……16

Appendix 1 – Tree Protection Plan……17

Appendix 2 – Tree Schedule and Recommendations……19

Appendix 3 – Protected Species……22

Appendix 4 – Technical Specification……23

Appendix 5 – Generic Installation Method……25

© Copyright 2020

1.0 Introduction

1.1 Report Brief

This report has been prepared for Mr Farooq to detail the methods to be used to protect the trees during the course of the site works: to erect a single storey extension at the rear of 57 Hall Lee Fold, and a new driveway from the road.

The report is the final in the series; the aim is to provide details of the proposed stages of works and measures necessary to protect the retained trees.

The objectives of the report are to use information drawn from my previous pre-development arboricultural report and arboricultural impact assessment, reference: OWA0166 PDR/AIA Amended.

To provide a tree protection plan detailing the location and type of protective fencing, locations of fencing alignment and areas requiring specialised ground protection (found in the **Tree Protection Plan – Appendix 1**).

- Produce a narrative report of the protection measures prior to and throughout the construction phases, with essential stages for the above protection identified in a methodical order.

- Ensure compliance with two British Standards: *BS 5837:2012 Trees in Relation to Design, Demolition and Developments – Recommendations,* and *BS3998:2010 Tree Works - Recommendations.*

- Provide a statement for the siting of materials and the site compound.

- Identify all reasonable precautionary action as well contingencies to safeguard the trees.

- Enable this document to satisfy the Local Planning Authority that trees are adequately safeguarded within influencing distance of the proposed works on the site.

© Copyright 2020

1.2 Relevant Background Information

The first stage of my work was to inspect all trees and record the findings within the Pre-development Report, which is the first part of the document (reference: OWA0166 PDR/AIA).

The arboricultural impact assessment involved making a professional assessment using my knowledge and experience to evaluate the details of the proposed development in relation to the trees. Then to the resolve issues which were reasonably practicable with the client.

Most of the trees on the site are protected by a tree preservation order and all are afforded protection within the Edgerton Conservation Area designation.

1.3 Purpose of the Report

This report is of great importance; it is a document that gives clear guidance for tree protection and must be adhered to, before, during and after the construction phase by all parties concerned, i.e. form part of the specification and schedule of works issued to the building contractor, and form part of the contract.
It should also be made part of site training for all workers.
Complete compliance with this document, will ensure the trees are adequately protected and maintained whilst site works take place.

1.4 Copyright

All rights in this report are reserved. No part of it may be reproduced or transmitted, in any form or by any means, electronic, mechanical, photocopying, recording or otherwise, stored in any retrieval system of any nature, without our written permission. Its content and format are for the exclusive use of the client. It may not be sold, lent, hired out or divulged to any third party without our written consent. © One World Arboriculture Ltd 2020.

2.0 Sequence of Works

Sequence	Action	✓	Initial
Stage 1	Obtain approval from the Local Authority planning office for this report		
Stage 2	Undertake the tree works (as detailed at **Appendix 2**) at least one month prior to starting the site works.		
Stage 3	Have the Local Planning Authority (LPA) inspect the proposed lines of the fencing/ground protection measures prior to their installation (as shown on the **Tree Protection Plan** in **Appendix 1**). Once inspected and approved, the protective fencing can be erected and must not to be moved or breached. The ground protection can also be put in place. Take photos of the trees lining the access routes and adjacent to areas where site work will take place to keep visual records of their condition.		
Stage 4	Undertake the construction of the new driveway, as proposed.		
Stage 5	Undertake de—construction of the existing conservatory by hand. No heavy machinery is permitted on site.		
Stage 6	Remove the ground protection within the footprint of the new extension, to permit commencement of this stage. Leave the ground protection beside the boundary and the where the walkway/patio will be. Undertake the construction works of the single storey extension at the rear of the property using screw piles driven by a hand pile rig. No heavy machinery is permitted on site.		
Stage 7	Once works are completed. Contact LPA to invite them to a site inspection/ give approval to remove the protective ground/fencing structures.		
Stage 8	Once approval is given, remove the protective fencing and ground protection, and fill any holes with soil.		

© Copyright 2020

Stage 9	Inspect the trees for signs of any damage and undertake post construction care and new tree planting of the 2 new trees.		
Stage 10	Maintain newly planting trees until established.		

Table 1 – Outline of the sequence of works

2.1 Tree Works prior to Demolition and Construction

2.1.1 Recommendations for Tree Works

All work must be carried out to BS 3998: 2010 – Tree Work - *Recommendations* and should be carried out by qualified and experienced approved contractor who is adequately insured, and their skills and training are up to date.

Please bring to my attention any tree defects seen by a tree surgeon or the client that were not apparent to me at the time of the survey. As these may have a bearing on the situation and action taken.

2.1.2 Protected Species

It is important to remember the law regarding protected species: refer to **Protected Species** - **Appendix 3** within this report. As a result, it is recommended that the works are undertaken at least one month in advance of other preparatory works on the site. This is a precautionary measure designed to help prevent delays in the proceeding works if protected species were found to be present.

2.2 Tree Works

The sequential action for carrying out tree works throughout the course of the site works are detailed in this section.

A total of 9 individual trees (**T1-T9**) were surveyed and mapped (refer to **Appendix 2 – Tree Schedule and Recommendations**). All arboricultural information recorded during the survey is presented.

© Copyright 2020

In summary the works are:

Tree Removal – Without damaging adjacent trees

1. The removal of two trees: **T1** and **T2** in order to facilitate the development.

Tree Pruning

1. No pruning is required to facilitate the development.

The remainder of the works listed below are for arboricultural reasons. Carry out the works in accordance with BS 3998:2010.

2. Prune **T3** (Sycamore) Remove the branch with the cavity leaving a short stub (15cm long) as the diameter of the branch is close to 1/3 of the stem that it is attached to, and this would create a wound that is too large if taken back to the branch collar. Aerially inspect the other cavity to determine its condition.

3. Prune the crown of **T4** (Urn Gum) to lift the crown over the road to give 5 metres clearance of it, to the nearest appropriate pruning points.

4. For **T5**, a Lime - remove the deadwood stubs.

5. Undertake pruning to **T7**, a Sycamore to selectively crown thin to let more light into the garden. Permission has already been granted under a separate application. Please refer to the permission given to Mr Farooq for more details.

Works around trees

1. **T5**, a Lime - Regularly and carefully prune to remove the epicormic growths with secateurs whilst they are still thin.

2. **T8** is a Beech, carefully remove the Ivy so a re-inspection can be made.

Once the tree works have been undertaken, all the trees can then be safeguarded using protective fencing and ground protection measures where specified.

© Copyright 2020

2.3 Protective Fencing

The careful installation of the protective measures is the next logical step after completion of the tree works.

To reinforce the required tree protection measures and avoid the requirement for ongoing arboricultural supervision, a pre-start meeting should be arranged with the site contractors, the Council's Tree Officer and/or me. During the meeting the alignment of protective fencing will be marked out, and any technical issues discussed.

The fencing will be erected in accordance with **Appendix 1 – Tree Protection Plan** and the specification below from BS 5837: 2012. The figure below shows a vertical and horizontal framework which is well braced to resist impact. The standard scaffold poles/clamps should be spaced at 3 metre intervals and securely driven into the ground, taking care to avoid any underground services and structural roots. I recommend that Heras fencing is used.

It is essential that no site works shall start until the Tree Officer is satisfied that the protective fencing is sited and erected correctly.

© Copyright 2020

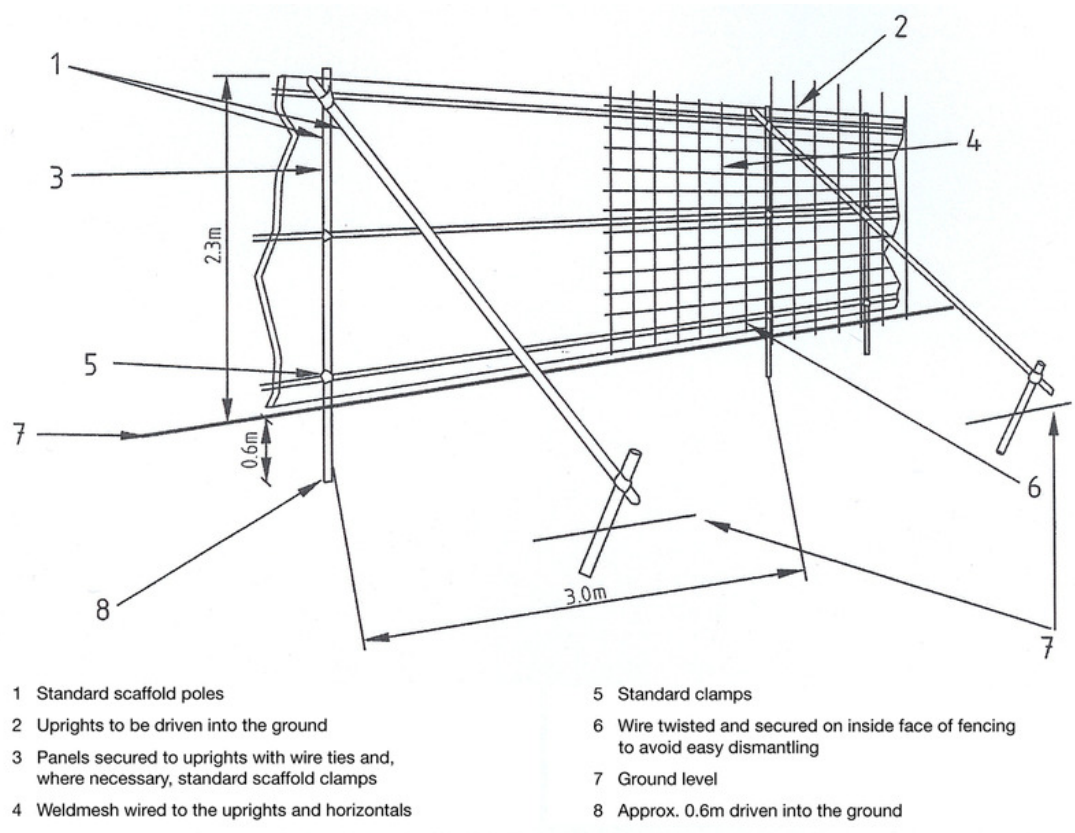

1 Standard scaffold poles
2 Uprights to be driven into the ground
3 Panels secured to uprights with wire ties and, where necessary, standard scaffold clamps
4 Weldmesh wired to the uprights and horizontals
5 Standard clamps
6 Wire twisted and secured on inside face of fencing to avoid easy dismantling
7 Ground level
8 Approx. 0.6m driven into the ground

Figure 1 – As specified in British Standard 5837:2012

This type of installation method is recommended for use in soft standing areas, such as it is appropriate for all the trees within the site.

The purpose is to prevent any damage occurring to parts of the trees, both above and below ground. The temporary protective fencing creates what is known as a Construction Exclusion Zone (CEZ). It must be made known to all persons on site that this area is to be considered a restricted area; no pedestrians, vehicles, storage of materials, equipment or machinery are allowed within the CEZ. I recommend inspecting and taking photos of the trees and the fencing at regular intervals to record the condition of them.

Along the line of the fencing, it is essential that waterproof signs are attached in clear view; one on each fence panel, using the wording below:

© Copyright 2020

Tree Protection Zone

Strictly no access

Do not move this fencing without prior authorisation from One World Arboriculture

Please refer to the Arboricultural Method Statement relating to the approved planning permission

Thank you

© Copyright 2020

It is essential that all people on site are aware of the access restrictions that apply to the areas where the trees are enclosed.

The protective fencing must be regularly inspected for faults or damage by the site manager or another responsible named person, and a written record kept. Any faults or defects must be repaired or replaced as soon as possible.

If any trees are damaged, contact should be made with me as soon as possible to discuss the safety and arboricultural implications, and to arrange for any remedial works to be undertaken.

The fencing should be sited in accordance with the measurements of the Plan – **Appendix 1**, so as to be outside of the root protection areas (RPAs) where shown.

I did not offset the root protection areas on the plan, as it is impossible to know exactly where the roots will be, so in order to adequately safeguard the trees I have specified protective fencing; and where additional protection is required, I have specified ground protection.

It is proposed to fence off and protect as much of the area as possible in order to protect the trees and their roots.

2.4 Ground Protection

The siting of ground protection will be required at the same time as the fencing. It will allow pedestrians with wheelbarrows to access over the rooting area of trees **T3, T4, T5, T7, T8** and **T9.** This will be in the form of weight bearing boards, and side butting scaffold boards to be laid prior to the commencement of any works and until the completion of all works. Thus, enabling the facing up of blockwork, and access in general**.** The ground protection will be in the form of interlinking ground protection boards, placed on top of a compression resistant layer such as wood chips to 150mm deep, and laid on a geotextile membrane. This is for loads up to 2 tonnes.

The final design should be agreed with the Council's Tree Officer prior to installation.

© Copyright 2020

This light duty ground protection is necessary for the following areas and is annotated on the plan (**Appendix 1**) in light orange shading:

1 – To the north of the property, the installation of the new driveway will provide a hard surface for access through some of the front garden. Then ground protection will be required across the front of the house and down the eastern side wall into the rear garden. Ground protection will also be required at the rear of the building.

This will protect the rooting areas of trees: **T3, T4** and **T5** in the front garden nearest to the house and **T7, T8 and T9** at the rear of the house**.**

Front of the house - The length of this is 9.70 metres and approximately 1.47 metres wide at the front of the property. The front porch/access way would have been ideal, but it is not practical to use due to the stepped level changes and issues for the inhabitants.

Beside the eastern most front window, additional ground protection measuring 1.95 metres long and 1.4 metres wide will be added, with additional wood chips to address the level changes from the paving slabs to the lawn.

These measures will allow 2 wheelbarrows to pass, whilst protecting the trees and link directly to the new driveway.

Side of the house - The length along the eastern side of the property is: 9.68 metres and 1.4 metres wide to allow 2 wheelbarrows to pass. It narrows to 1.2 metres at the southern end and will be a free space for resting barrows or hand tools.

Rear of the house – The area of the new extension will require ground protection. Whilst the existing conservatory is demolished. This will primarily be within the footprint of the new extension, as it then allows the fencing to stay in the same place throughout.

Only the ground protection will be removed during the construction phase, as and when necessary. This will be after the demolition phase, when the ground protection in the development footprint can be removed to enable the build. The area at the side next to the neighbouring boundary, as well as where the walkway/patio are located, will remain in situ during the build process.

© Copyright 2020

Once the extension has been built, the ground protection for the walkway/patio can be removed to enable the construction of this structure.

2.5 Construction of the New driveway

It will be constructed from a cellular confinement system, as specified, as it is 'tree friendly' configurations that allows roots to function beneath them.

The CellWeb product by GeoSynthetics Ltd, has been specified as appropriate given its reputation within the arboricultural industry: a site specific **Technical Specification** template is given in **Appendix 4,** and the **Generic Installation Method** is provided in **Appendix 5.** An excel version of **Appendix 4** will be sent along with this report via email to my client. Their designer can complete the sections and contact the representative at CellWeb for the region. They will assist you to identify the exact specification for your needs, and I believe this is still free of charge.

It is important that the installation of the new driveway shall be carried out by a competent company, experienced in successfully working in close proximity to trees, using the CellWeb product.

2.6 De-construction phase – removal of existing conservatory

As a precautionary measure, the method of demolition will be working from the existing hard standing platforms and not on any areas of soft ground. Pedestrian only ground protection would be suitable to safeguard the rooting area under the trees from debris falling accidentally.
The demolition technique of working backwards from the trees will ensure that any soil/ground that becomes exposed following the removal of the hard surfacing does not become compacted any further.
Once the area is cleared, the ground protection in the footprint of the new extension can be removed (apart from within the walkway/patio area and western side close to the boundary).

2.7 Construction of the new extension

The foundations for the new extension will be screw pile, and these will be installed using a hand held rig.

© Copyright 2020

All works to the build will take place within the footprint. The elevated walkway area between the extension and the trees will be built last and protected with ground protection throughout. This will enable access to face up the blockwork and install the glasswork etc., The space for this is 7.8 metres long by 1.28 metres wide. Once the walkway/patio is ready for construction, the ground protection will be removed there, and the walkway constructed.

Any scaffolding required to construct the roof will be carried out from the areas of ground protection.

2.8 Removal of the Protective Fencing

After both the demolition and construction period, a post development meeting will be arranged to inspect the site and grant approval for the protective fencing to be carefully dismantled and removed from site.

2.9 Other Tree Protection Measures

2.9.1 Ground Level Changes

No ground level changes are required within the vicinity of any RPA of the trees on site.

2.9.2 Exposed Roots

It is important that in the event of any tree roots being exposed within the RPA of a tree, they must be left as intact as possible. The use of hand tools will be employed to carefully digging around the roots.

Exposed roots can become irreparably damaged quite quickly due to climate conditions associated with exposure, and wounding. In the event of exposure cover with a dry cloth such as hessian to prevent freezing overnight, or a wet one on warm days.

If roots are to be severed then clean, straight cuts must be made, in order to minimise the extent of wounding. If roots with a diameter of greater than 25mm are encountered, I would be required to be informed and potentially attend the site to make a full assessment and recommendations.

© Copyright 2020

2.9.3 Aerial Tree Parts

The site workers must be careful to avoid any contact with the canopies of the trees on the site in order to avoid damage.

2.9.4 Underground Utility Issues

Details of the route of utilities to the new extension have yet to be provided, but it is thought they will feed from the main house. No assessment has been made of the impact of tree roots and the likely location of new services. It has been presumed for the purposes of this report that all utilities will be installed outside of the Construction Exclusion Zone shown on **Appendix 1**.

Where the installation of services within the Construction Exclusion Zone of retained trees is unavoidable, appropriate work methods will be required to ensure the safe long-term survival of those trees. This process will require additional consultation with a qualified Arboricultural Consultant and is likely to be more expensive than conventional trench installation.

2.9.5 Location of Site Compound

The location of the site compound (toilets and storage of materials) is not known but there will be room to site them on the new driveway.

No heavy machinery is permitted on the site for the extension.

2.9.6 Ground Contamination

It is important that the storage for liquids such as fuels, oil or paint should be located as far away from any trees as possible, due to the risk of soil contamination caused by accidental spillage.

3.0 Other Tree Works

3.1 Accidental Tree Damage

If, during the course of any site work any trees are damaged, I will be contacted immediately in order to agree appropriate remedial action.

As a precautionary measure it is recommended that photographs of the trees are taken (along the access routes and adjacent to work areas) before, during and after the construction phase in order that any perceived damage can be recorded and verified.

© Copyright 2020

3.2 Post Construction

When the construction phase has been completed, and authorisation has been given to carefully remove the fencing, it is recommended that any holes created from the removal of the short anchoring scaffold poles are infilled with soil from the garden.

It is not foreseen that tree works will be necessary after the construction has taken place, and it is recommended an inspection of the trees is made after the fencing has been removed to ensure no damage has occurred, such as compaction to the soil or broken branches within the canopy.

4.0 Liaison with the Tree Officer

It is recommended to consult the Council's Tree Officer for:

1 Agreement in the event that any alteration to the fencing alignment is necessary to allow for approved activities.

2 Approval of, and as a precautionary measure for post-construction remedial tree works are to be carried out on the trees.

3 Gaining approval for the removal of the protective fencing after the construction phase has been completed.

5.0 Post Construction Tree Care

Once the works are completed it is advised that new tree planting will take place on the land to mitigate the loss of **T1** and **T2.** I can advise on this outside of this report.

Trees are dynamic living organisms whose structure is constantly changing. All trees can experience damage or stress from biotic and abiotic factors. Following site development, regular inspections of all retained trees should be undertaken by a qualified Arboricultural Consultant such as myself.

© Copyright 2020

Appendices

Appendix 1 – Arboricultural Method Statement Plan

© Copyright 2020

Appendix 1: Tree Protection Plan — Ref: OWA0166 AMS

Address: 57 Hall Lee Fold, Lindley, Huddersfield, HD3 3NX.

Date: 12th December 2020 — Scale: 1:200 at A2

Copyright: One World Arboriculture —



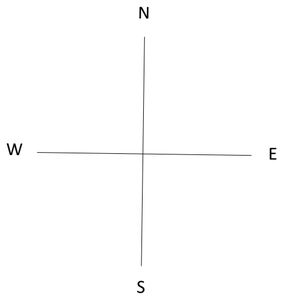

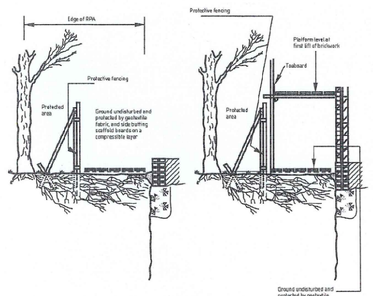

Figure 3. – Scaffolding within the RPA

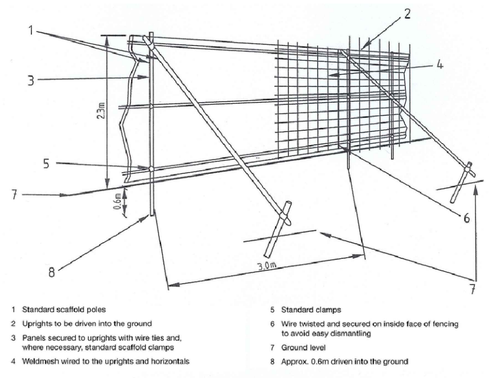

1 Standard scaffold poles
2 Uprights to be driven into the ground
3 Panels secured to uprights with wire ties and, where necessary, standard scaffold clamps
4 Weldmesh wired to the uprights and horizontals
5 Standard clamps
6 Wire twisted and secured on inside face of fencing to avoid easy dismantling
7 Ground level
8 Approx. 0.6m driven into the ground

Figure 2. – Protective fencing for RPA

Ground protection will be a geotextile membrane with 150mm of a compression resistant layer such as woodchip on top, held in place with scaffold boards at the sides and weigh bearing boading on top which interlinks in place. Load limit is up to 2 tonnes.

Tree Protection Zone

Strictly No Access

Do not remove this fencing without prior authorisation from One World Arboriculture Ltd

Tel: 0781 551 6648 or email:
flora@oneworldarboriculture.co.uk

Please refer to the Arboricultural Impact Assessment Report relating to the approved planning permission.

Key

- Tree stems
- Trees to be removed to facilitate the development
- Trees to be retained
- Line of protective fencing
- Root protection area
- Working space

Appendix 2 – Tree Schedule and Recommendations

© Copyright 2020

Tree	Age, Species & Latin name	Height (m)	Crown Height (m)	Stem diameter (DBH) cm	Height (m) and direction of lowest branch	Radius from tree centre - Root Protection Area m^2	Crown spread in metres (N/E/S/W)		Observations	General Physiology	General Structure	Life expectancy (years)	Amenity value	Recommendations/ Recommendations to facilitate the development proposals	Priority for works	Re-inspection timing	Retention Category
T1	Mature Cherry *Prunus sp.*	12	3.7	44	3.0 W	5.28	N E S W	6.3 4.7 3.9# 5.0#	The tree is situated on the boundary line of the adjacent property. It has twin stems at 2.3 metres and is surrounded by variegated Laurel hedging. It has been crown reduced in the past at about 5 metres and has significant re-growth. There is a light attached to the tree at 2.2 metres. This tree is protected as it is within Edgerton Conservation Area.	Good	Good	20-40	Mod	No action is required./ Remove the tree to facilitate the development.	n/a	5	B1/U
T2	Mature Lawson Cypress sp. *Chamaecyparis lawsoniana*	4.9	0+	6 ave.	0+ N/E/S/W	3.22	N E S W	0.5 1.5 1.5 1.5	Thought to be a variety of Lawson Cypress with silver-blue foliage. There are 20 stems enamating from the base. The combined stem diameter (dbh) is 26.8cm The tree is situated in the neighbouring garden, close to the boundary. There were no major visible defects. This tree is protected as it is within Edgerton Conservation Area.	Good	Good	20-40	Low	No action is required./ Remove the tree to facilitate the development.	n/a	5	C2/U
T3	Mature Sycamore *Acer pseudoplatanus*	12.5	4	62@ 1.2	2.8 NE	7.44	N E S W	7.8 3.0 2.7 8.6	The tree has 1 main stem and a co-dominant side limb that grows out towards the road. It has a sizable cavity on it at 2.4 metres (facing the Cherry) and a bark wound on the main stem. The tree has been crown lifted over the garden to the north to give clearance over the road, this has been carried out using flush cut pruning and there are a couple of small cavities, whilst most of the wounds have sealed over. This tree is protected by a TPO within Group G1.	Fair	Fair	40+	High	Remove the branch with the cavity leaving a short stub (15cm long) as the diameter of the branch is close to 1/3 of the stem that it is attached to and this would create a wound that is too large. / No action is required to faciitate the development.	Mod	5	B1
T4	Early mature Urn Gum *Eucalyptus urnigera*	14.5	4	30	3.5 N	3.6	N E S W	3.3 6.6 1.5 2.1	Thought to be an Urn Gum, it is situated along the front boundary amongst a Laurel hedge. Some of the foliage hangs low over the road. There were no major visible defects. This tree is afforded protection as it is within Edgerton Conservation Area.	Fair	Fair	40+	Mod	Prune to lift the crown over the road to give 5 metres clearance of it. / No action is required to facilitate the development.	High	5	C2
T5	Mature Lime *Tilia sp.*	23.7	0.2	84	3.4 W	10.08	N E S W	5.9 6.7 6.9 3.5	This old tree has twin stems at 4.4 metres and has been crown lifted over the garden in the past. There was a pile of rotten branch pieces to one side of the tree, the client says it drops deadwood. There were deadwood stubs of varying sizes throughout, of a moderate size. Typical of the species, there were many epicormic growths at the base. This tree is protected by a TPO within the Group G1.	Good	Good	40+	High	Remove the deadwood stubs. Prune the epicormic growths with secateurs whilst they are still thin. / No action is required to facilitate the development.	High	5	B1

# indicates estimated

Tree	Age, Species & Latin name	Height (m)	Crown Height (m)	Stem diameter (DBH) cm	Height (m) and direction of lowest branch	Radius from tree centre - Root Protection Area m^2	Crown spread in metres (N/E/S/W)		Observations	General Physiology	General Structure	Life expectancy (years)	Amenity value	Recommendations/ Recommendations to facilitate the development proposals	Priority for works	Re-inspection timing	Retention Category
T6	Semi mature Lawson Cypress *Chamaecyparis lawsoniana*	4.4	0.6	ave 6	0+ N/E/S/W	2.04	N E S W	1.25 1.25 1.25 1.25	There are approximately 8 stems emanating from the base. The combined stem diameter (dbh) is 17.0cm. The Lawson Cypress was situated on the edge of a rockery and close to the outbuilding of the neighbouring property. This tree is afforded protection as it is within Edgerton Conservation Area.	Good	Good	20-40	Low	No action is required. / No action is required to facilitate the development.	n/a	5	C1
T7	Mature Sycamore *Acer pseudoplatanus*	22.4	5.1	77	5.1 W	9.24	N E S W	6.4 9.0 9.0# 3.7	The tree is situated in the rear garden and very close to the stone boundary wall. There were epicormic growths which prevented a detailed inspection of the base of the tree. The tree has been crown lifted in the past using flush cut pruning and there are some cavities as a result, although many have sealed over. A washing line is attached to the tree. My client says the shade cast by the tree is very dense. This tree is protected by a TPO in Area A6.	Good	Good	20-40	High	Selectively crown thin to let more light into the garden. Permission has already been granted for this. / No action is required to facilitate the development.	Mod	5	B1
T8	Mature Beech *Fagus sylvatica*	26#	4.2	74 over Ivy	6.5 NW	8.88	N E S W	7.0 6.1 10# 5.0	The tree is situated along the boundary near to T7. Dense Ivy colonises much of the tree and prevented a detailed inspection. I could see that there are twin stems but I could not see the condition of the union. This tree is protected within the TPO area A6.	Good	Good	40+	High	Carefully remove the Ivy so a re-inspection can be made. / No action is required to facilitate the development.	High	2	A2
T9	Mature Beech *Fagus sylvatica*	26#	8.7 over site	65#	9.6 NW over site	7.8	N E S W	6.5 5.8 6.0# 6.0#	The Beech tree is situated along the rear boundary of the adjacent property, close to the fenceline. It has been crown lifted over the garden by flush cut pruning. A fence and access prevented a detailed inspection of the tree. This tree is protected within the TPO in area A6.	Good	Good	40+	HIgh	No action is required. / No action is required to facilitate the development.	n/a	5	A2

# indicates estimated

Appendix 3 – Protected Species

Protected Species – Bats

Mature trees often contain cavities, crevices and hollows which are a potential habitat for roosting bats. Bats are afforded protection under Schedule 5 of the Wildlife and Countryside Act 1981 (as amended), as well as under Schedule 2 of the Conservation of Species and Habitats Regulations 2010, and as such causing damage to a bat roost constitutes an offence.

A preliminary ground level appraisal of the wildlife habitat value of each tree was undertaken as part of the arboricultural survey. There were no features suitable to support roosting bats.

Should the presence of a bat roost be suspected whilst undertaking works on any other trees and groups on site, operations must be halted until a licensed bat handler or ecologist can provide advice.

Protected Species - Birds

Trees are a potential habitat for nesting birds, which (as well as their nests and eggs) are protected under the Wildlife and Countryside Act 1981 (as amended). This makes it an offence to intentionally or recklessly, damage or destroy an active birds nest or any part thereof.

Due to the suitability of the trees within the survey boundary for nesting birds, all tree work should ideally be undertaken outside the bird nesting season (British bird nesting season: primarily March to August inclusive).

Nonetheless, some bird species will nest outside of these months and a detailed inspection of each tree should be undertaken immediately prior to the arboricultural works being undertaken. Should an active nest be found (being built, containing eggs or chicks), then any work likely to affect the nest must be halted and resume only after the nest becomes inactive.

© Copyright 2020

Appendix 4 Technical Specification

© Copyright 2020

Reinforcement with CellWeb TRP®

Application [11 RUR-CEL]

Information For Calculation

Geosynthetics

Date:	
Client / End user:	Tahir Farooq
Designer / Specifier:	
Planning Authority:	Kirklees Council
Project Title:	57 Hall Lee Fold - driveway
Location:	57 Hall Lee Fold, Lindley, HD3 3NX
Application (or any additional information):	

Traffic information	
Vehicle Type (nb of axles)	
Axle Load: P (kN/axle)	
Wheel load: (kN/wheel)	
Vehicle Weight:(kg or Ton)	
Number of traffic passages:	

Area	
Area approx (m2) and/or Dimensions (m x m)	

Traffic (Please Tick)	
Regular HGV use	
Occasional HGV use	
No HGV use	
Unusual load e.g. crane or piling rig	
Occasional fire engines	
Bin lorries	

Existing Ground	
CBR (%)	

Existing ground	
Type of soil	
Granular Soil	
Cohesive Soil	
Peat Soil	

Type of Surfacing (Porous surface always recommended for TRPA)	Surface to be used during construction	Surface to be used after construction
Block Paving+Sand Bedding		
Porous Tarmac	yes	yes
Resin bonded gravel + Binder course AC 14		
Loose Gravel		
Golpla System infill gravel		
Golpla System infill grass		
Sudscape		
Other		
Depth of Surface *		

*See drawing below

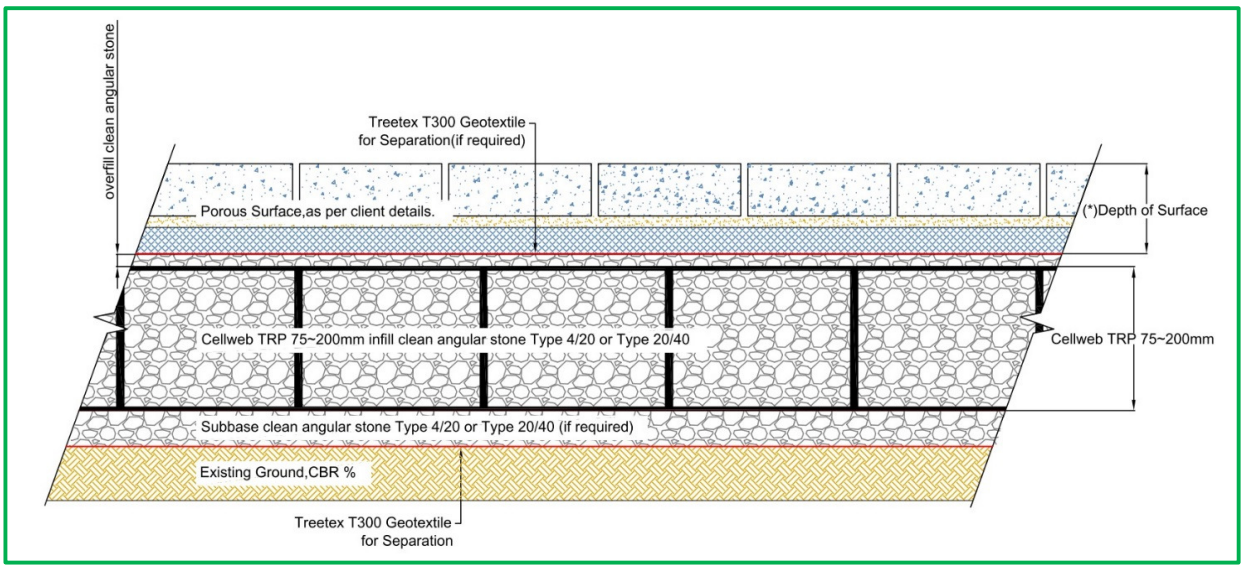

Appendix 5 Generic Installation Method

© Copyright 2020

Geosynthetics Limited Tel: 01455 617 139 Fax: 01455 617 140 Email: sales@geosyn.co.uk

Cellweb® TRP Installation Guide



Step 1: Prepare Surface



Step 2: Lay out Treetex™



Step 3: Lay out Cellweb ® TRP

- Cellweb® TRP is a NO DIG tree root protection measure and it is recommended that no excavation be performed without prior approval and guidance from the Local Authority Arboricultural Officer.
- Soil compaction from vehicles, machinery and materials is to be strictly prohibited during construction within Root Protection Areas (RPAs).
- Approval must be obtained from the Local Authority that the design and the method of construction is acceptable.
- Further information is available from the following two documents;
  - British Standard BS5837: 'Trees in Relation to Design, Demolition and Construction' (2012).
  - Arboricultural Advisory and Information Service: Practice note 12 – 'Through the Trees to Development' (APN12).

Installation Method

1. Prepare the Surface

- Remove the surface vegetation using appropriate hand held tools or herbicide (see Note 1).
- Remove any surface rocks, debris and organic material.
- Create a level surface by filling any hollows with clean angular stone or sharp sand.
- Do not level off high spots or compact the soil through rolling.

2. Lay out the Treetex™ Non-Woven Geotextile

- Lay out the Treetex™ over the prepared area, overlaying the edges of the required area by 300mm.
- Overlap any joins by 300mm minimum or more, depending on soil structure (see Note 2).

3. Lay out the Cellweb® TRP Cellular Confinement System

- Lay out the collapsed Cellweb® TRP on-top of the Treetex™.
- Place one of the supplied J pins into the centre cell at the end of the panel and secure into the ground.

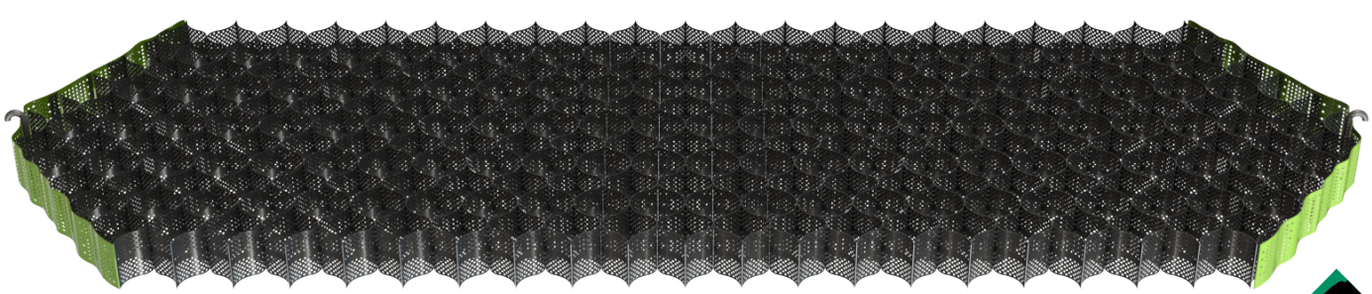

Cellweb® TRP - Installation Guide



Step 3: Pinning Cellweb ® TRP



Step 3: Stapling Cellweb ® TRP

- Pull out the Cellweb® TRP to its full 8.1m length and secure its length with another J pin.

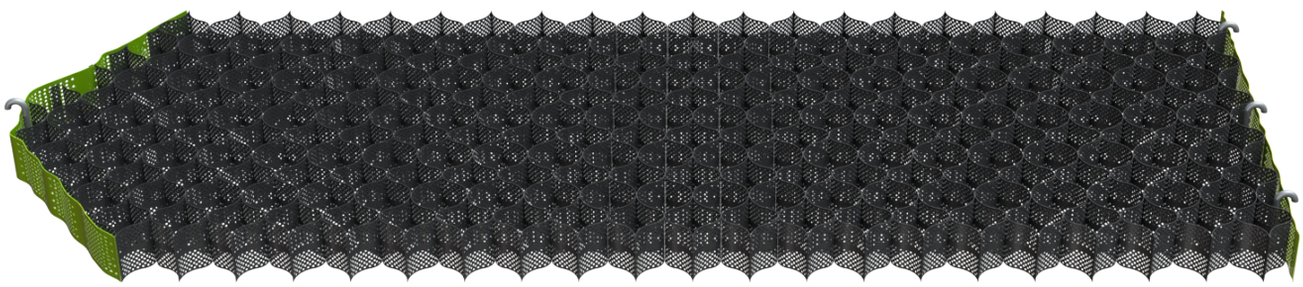

- Now measure its width to 2.56m and secure in each of the corners with the J pins.
- Use 10 pins per panel to create a panel measuring 8.1m x 2.56m.

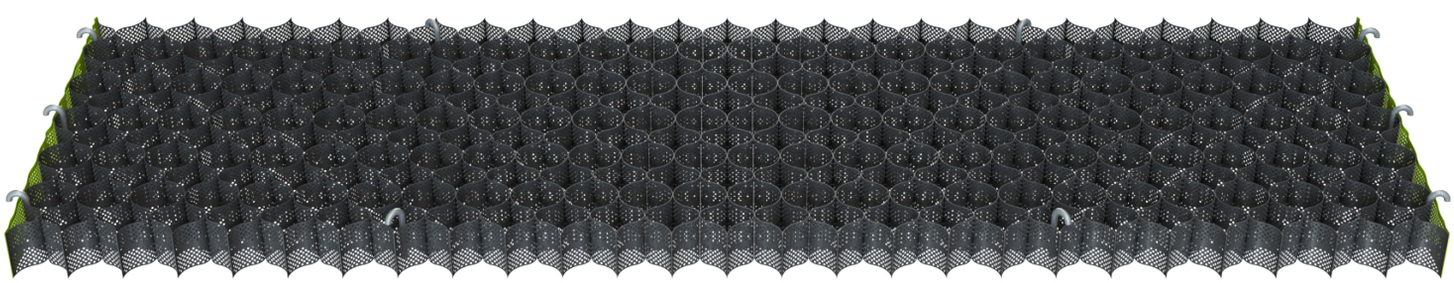

- This will produce a cell size of 259mm x 224mm which is the required cell diameter. Each cell must be fully extended and under tension.
- Staple adjacent panels together at each cell (see Note 3).
- If a curved path or shape is required, this should be cut when the Cellweb® TRP panel is pinned out to 8.1 x 2.56m, ensuring complete cells remain. Do not try to curve or bend the Cellweb® TRP panels into place.
- All cells must be fully opened to the required diameter.

Cellweb® TRP - Installation Guide



Step 4: Clean Angular Stone



Step 5: Edge Restaints



Step 6: Surface Options

4. Infill the Clean Angular Stone

- The infill material must be a clean angular stone, Type 4/20mm or Type 20/40mm (see Note 4).
- Do not use M.O.T type 1 or crushed stone with fines for tree root protection.
- Infill the Cellweb® TRP cells with the clean angular stone, working towards the tree and using the infilled panels as a platform.
- Minimum 25mm overfill of clean angular stone.
- No compaction is required of the infill. Do not use a whacker plate or other means of compaction**.**

5. Edge restraints

- Excavations for kerbs and edgings should be avoided within the RPAs.
- Where edging is required for footpath and light structures, a peg and treated timber board edging is acceptable
- Other options include wooden sleepers, kerb edging constructed on-top of the Cellweb® TRP system, plastic and metal edging etc.

6. Surface options

- Surfaces can include block paving, asphalt, loose gravel, grass and gravel retention systems (eg Golpla™), resin bound gravel, concrete etc.
- For Root Protection Areas this surface must be porous.

NOTES

1. **Herbicide:** According to BS5837:2012 "The use of herbicides in the vicinity of existing trees should be appropriate for the type of vegetation to be killed, and all instructions, warnings and other relevant information from the manufacturers should be strictly observed and followed. Care should be taken to avoid any damaging effects upon existing plants and trees to be retained, species to be introduced, and existing sensitive habitats, particularly those associated with aquatic or drainage features."
2. **Geotextile:** We recommend the installation of a Treetex™ under the Cellweb® TRP, or under the sub-base, if installed. The overlapping between adjacent rolls of Geotextile should be: CBR > 3%: 300mm minimum, CBR between 1% and 3%: 500mm minimum. CBR ≤ 1%: 750mm minimum.
3. **Staples:** Number of staples per join: 200mm: 5 staples. 150mm: 4 staples. 100mm: 3 staples. 75mm: 3 staples.
4. **Granular Fill:** Open graded sub-base, clean angular stone Type 4/20 or Type 20/40. Please refer to BS7533-13:2009 and to the Design Manual for Roads and Bridges (DMRB), Volume 4 Geotechnics and Drainage, Section 1 Earthworks, HA44/91, Volume 7 – IAN 73/06 Design Guidance for road pavement foundations and Manual of Contract Documents for Highway Works (MCHW), Volume 1 Specification for Highway Works for the construction and maintenance of the fill material.

This information corresponds to our current knowledge on the subject. It is offered solely to provide possible suggestions for your own experimentation. It is not intended, however, to substitute for any testing you may need to conduct to determine for yourself the suitability of our products for your particular purposes. This information may be subject to revision as new knowledge becomes available. Since we cannot anticipate all variations in actual end use conditions, Geosynthetics Limited makes no warranties and assumes no liabilities in connection with this information. Nothing in this publication is to be considered as a licence to operate under or a recommendation to infringe any patent right.

Produced by:

Date 12th December 2020

One World Arboriculture Ltd
2-4 Southgate, Elland, West Yorkshire, HX5 0BW.

Services we offer:

Reports

- ✓ **Development** – Tree Constraints Plans, Arboricultural Impact Assessments, Method Statements and Site Supervision
- ✓ **Tree Condition** – Risk Assessments, Tree Hazard analysis, Tree Health Care
- ✓ **Tree Planting Schemes**
- ✓ **Mortgage**
- ✓ **Insurance**
- ✓ **Subsidence**

Talks and Tours

- ✓ **Tree Safety - Your duty as a Tree Owner / Manager**
- ✓ **Tree Identification**
- ✓ **Environmental Education**

© Copyright 2020