BWB

BETTER SOLUTIONS, INTELLIGENTLY ENGINEERED

SUSTAINABLE BUILDING SERVICES

Avant Homes Ltd

Former St Luke's Hospital Site

Blackmoorfoot Road, Huddersfield, Kirklees

LIGHTING ASSESSMENT

LDP2217

www.bwbconsulting.com

BWB

SUSTAINABLE BUILDING SERVICES

Avant Homes Ltd
Former St Luke's Hospital Site
Blackmoorfoot Road, Huddersfield, Kirklees

LIGHTING ASSESSMENT

Birmingham
Livery Place, 35 Livery Street, Colmore Business District, Birmingham, B3 2PB
T: 0121 233 3322

Cambridge
14-16 High Street, Histon, Cambridge
CB24 9JD
T: 01223 235 173

Leeds
Whitehall Waterfront, 2 Riverside Way, Leeds
LS1 4EH
T: 0113 233 8000

London
11 Borough High Street
London, SE1 9SE
T: 0207 407 3879

Manchester
4th Floor Carvers Warehouse, 77 Dale Street
Manchester, M1 2HG
T: 0161 233 4260

Market Harborough
12a Woodcock House, Compass Point Market Harborough, Leicestershire, LE16 9HW
T: 01858 455020

Nottingham
Waterfront House, Station Street, Nottingham NG2 3DQ
T: 0115 924 1100

August 2018

DOCUMENT ISSUE RECORD

BWB Reference:	

Revision	Date of Issue	Status	Author:	Checked:	Approved:
P1	28/08/2018	S2	Barry Quinn	Peter Leonard	Peter Leonard

Notice

This document has been prepared for the sole use of the Client in accordance with the terms of the appointment under which it was produced. BWB Consulting Limited accepts no responsibility for any use of or reliance on the contents of this document by any third party. No part of this document shall be copied or reproduced in any form without the prior written permission of BWB.

CONTENTS

1. INTRODUCTION 1
Instruction 1
Figure 1.1: Illustrative Masterplan 1
Objectives 1
Scope of Works 2
Potential effects 2
Guidance 3
Local Guidance 4
2. THE SITE 6
Site Location 6
Existing Condition 6
Site Context 7
Site Lighting Context 7
Environmental Zone 8
3. PROPOSED DEVELOPMENT 9
Proposed site and context change 9
Proposed Site Lighting 9
4. RECOMMENDATIONS 10
General recommendations 10
Recommendations for Lighting 11
5. ANALYSIS 12
Operational Effects 12
6. CONCLUSION 14

FIGURES

Figure 1.1: Illustrative Masterplan
Figure 2.1: Site Location Plan

APPENDICES

APPENDIX 1: Proposed External Lighting Layout
APPENDIX 2: Proposed Luminaire Type

1. INTRODUCTION

Instruction

1.1 BWB Consulting Ltd has been appointed by Avant Homes to undertake a lighting assessment for a residential development at St Luke's Hospital Site, off Blackmoorfoot Road in Huddersfield, Kirklees.

1.2 The assessment supports the following applications on the named development:

1. Reserved Matters Application for the residential development of 200 dwellings in pursuant of application Ref 2016/91337; and

2. Full application for the residential development of 26 dwellings and onsite open space.

Figure 1.1: Illustrative Masterplan

Objectives

1.3 The objectives of the report are:

- This report reviews the potential effects of new lighting and reviews methods of lighting which ensure safe access and egress within the Study Area and limit potentially obtrusive effects to receptors that may have a negative response to a change in their lighting condition. Nearby residential properties and wildlife / habitat which are found on, near or utilising the Site are typical receptors considered for analysis

Scope of Works

1.4 The Scope of work included:

- Identification of a baseline lighting condition;
- Identification and assessment of receptors and their sensitivity;
- Identification of required / anticipated lighting provisions for the Proposed Development; and
- Assessment of the potential effects created by a new outline lighting condition with respect to the baseline condition.

Potential effects

1.5 New developments often require or warrant lighting installations for functional safety or aesthetic purposes. Three main types of direct effects that can be created by a new lighting installation are typically reviewed for analysis purposes, with reference to ILP GN01:2011 Guidance Notes for the Reduction of Obtrusive Light. These direct effects include:

- Light spill, which is considered to be 'the spilling of light beyond the boundary of the site on which a light source is located', such that it causes a noticeably adverse effect. More simply, light spill is often termed as the intrusion of light into homes. It can also have a negative effect on wildlife and ecological systems local to an installation.
- Sky glow, which is considered to be 'the brightening of the night sky' above illuminated areas. The brightness created is constantly varying as a function of many parameters such as direct upward-lighting, ground surface reflectance, overhead cloud cover, and the degree of water droplets in the atmosphere - rain, fog/mist, and snow, for example, exacerbate the effect.
- Glare, which addresses the potential for experiencing visual discomfort or disability stemming from direct views of lamp sources or high contrast of an installation against a dark background. The placement of luminaires, their photometric characteristics, and the viewing context contribute to glare, which has been noted to result from uncontrolled private lighting installations, security lighting, street lighting mounted at high level near residences or habitat.

1.6 Contributing to these direct effects are three design aspects that should be considered alongside the purpose for a new lighting installation and the type of sensitive receptors found in the local area. These indirect effects are considered to include:

- Building Luminance, which considers the appropriateness and scale of brightness for the lighting / highlighting of built structures. Design criteria is included within ILP guidance notes as more of a main effect. While this is addressed independently, building luminance can also be considered as an indirect contributor to light spill, sky glow and glare.
- Light levels, both as designed and installed, which have the potential to create areas which have a noticeable difference in brightness. A new lighting installation in an area that has not been lit or is significantly brighter than the surrounding area may affect both adjacent receptors in the form of light spill or glare and those over a larger area by contributing to sky glow through over lighting.

- Light colour, which has the potential to alter an individual's perception of their environment with respect to colour and clarity, as the human eye responds best to whiter light with higher quantities of ultraviolet wavelengths. Various wildlife species may respond differently to spectral composition depending on how reliant they are on darkness; many nocturnal animals continue their social habits and feeding behaviours with increased activity in the area while others may decrease their activity and possibly desert their habitat. This type of effect could affect pedestrians, vehicle operators and wildlife and are likely to occur where new lighting is placed.

Guidance

International guidance

Commission Internationale De L'Eclairage (CIE 150)

1.7 The purpose of this guide is to help formulate guidelines for assessing the environmental effects of outdoor lighting and to give recommended limits for relevant lighting parameters to contain the obtrusive effects of outdoor lighting within tolerable levels. As the obtrusive effects of outdoor lighting are best controlled initially by appropriate design, the guidance given is primarily applicable to new installations; however, some advice is also provided on remedial measures which may be taken for existing installations. This guide refers to the potentially adverse effects of outdoor lighting on both natural and man-made environments for people in most aspects of daily life, from residents, sightseers, transport users to environmentalists and astronomers.

- Guidelines for Minimising Sky Glow (CIE 126)

1.8 These guidelines prepared by Commission Internationale De L'Eclairage provide general guidance for lighting designers and policy makers on the reduction of sky glow. The report gives recommendations about maximum permissible values for lighting installations. These values must be regarded as limiting values. Lighting designers should seek to meet the lowest specifications for the design. Other uses of the open air areas at night will usually result in less stringent sky-glow requirements. Practical implementation of the general guidance is left to National Regulations.

National guidance

Institute of Lighting Professionals (ILP) Guidance Notes for the Reduction of Obtrusive Light

1.9 The ILP has proposed lighting guidance and criteria for local authorities with a recommendation that they are incorporated at the local plan level. The guidance defines various forms of light pollution and describes a series of environmental zones (similar to the CIE 150 environmental zones). The ILP guidance provides suitable criteria against which the effects of artificial lighting can be assessed and is used in this assessment.

- DEFRA's Lighting in the Countryside: Towards Good Practice

1.10 The Office of the Deputy Prime Minister (ODPM – now Department for Communities and Local Government) in conjunction with the Countryside Commission published 'Lighting in the Countryside: Towards Good Practice' in July 1997, and a revised issue in 2001. The guidance was developed to 'provide practical advice on the prevention and control of lighting effects through appropriate action by all those involved with lighting in the countryside'. Its objective is 'to identify good practice in the planning and design of lighting in rural areas; and advise on how it can be achieved, using case study examples'. The guide aims to provide an overview and common understanding of all aspects of good lighting practice stating that close co-operation and participation is required for all those involved in planning, designing and installing lighting schemes. The guidance provides valuable information on lighting best practice and the standard methodology outlined in this guidance document has been followed as part of this assessment. Whilst, the guidance relates to 'lighting in the countryside', it is considered best practice to adopt many of the principles contained within the guidance to sites of a more urban nature.

- BS 5489: Code of Practice for the Design of Road Lighting – Part 1: Lighting of Roads and Public Amenity Areas

1.11 BS 5489 Part 1 provides recommendations on the general principles, aesthetic and technical aspects of road lighting and advises on statutory provisions, operation and maintenance of lighting. The standard provides recommendations for the design of lighting for all types of highways and public thoroughfares, including those specifically for pedestrians and cyclists, and for pedestrian subways and bridges. It also provides recommendations for the design of lighting in urban centres and public amenity areas.

- BS 13201: Road Lighting – Part 1, 2, 3, 4: Performance Requirements

1.12 This standard defines lighting classes for road lighting according to photometric requirements and aiming at the visual needs of road users. It also considers environmental aspects of road lighting.

Local Guidance

Kirklees Council Planning Applications Validation Checklist

1.13 Section A7 Lighting Assessment states the following:

1.14 Glare and stray light from external lighting associated with development may be held to affect local amenity, dark landscapes and nature conservation to an unacceptable degree and/or to adversely impact on the character of a Conservation Area or listed building.

1.15 Depending on location applications that include proposals for external lighting can raise issues relating to glare and light pollution. Such applications need to be supported by detailed information to include:

- 1. The proposed level of maintained average horizontal illuminance for the site,
- 2. The predicted vertical illuminance that will be caused by lighting when measured at the windows of any properties in the vicinity

- 3. The specification of the luminaries, including the number and location of the luminaries, the type and rating of the lamps, the design of lamp housing and proposals to minimise or eliminate glare from the use of the lighting installation
- 4. The proposed hours of operation of the lighting.
- An overview of issues relating to light pollution can be found in the Institution of Lighting Professional's (I.L.P.) Guidance Notes for the reduction of obtrusive light (GN01:2011)

2. THE SITE

Site Location

2.1 The site is located to the south west of Huddersfield, and currently comprises land associated with the former St. Luke's Hospital. To the north east, the site is bordered by existing residential dwellings off Chapel Terrace, with Nabcroft Lane beyond. To the south east, the site is bordered by Nabcroft Lane with existing dwellings off Nabcroft Lane and an industrial estate beyond. To the south, the site is bordered by Sunningdale Road with existing residential dwellings beyond. To the south west, the site is bordered by Oak CE(VC) Primary School and associated outdoor space. To the north west, the site is bordered by existing residential dwellings, with Blackmoorfoot Road beyond.

2.2 The location of the site is shown in **Figure 2.1**

Existing Condition

2.3 There is no existing exterior lighting within the Study Area as the former hospital has been demolished and removed from site.

2.4 The bounding Sunningdale Road to the south of the Study Area is provided with street lighting which appears to be installed in line with British Standards. This installation utilises

6m columns with dated luminaires which will create a noticeable, visible feature within the night-time visual envelope for receptors with direct views of the installation.

2.5 The bounding Nabcroft Lane to the south east of the Study Area is provided with street lighting which appears to be installed in line with British Standards. This installation utilises 6m columns with dated luminaires which will create a noticeable, visible feature within the night-time visual envelope for receptors with direct views of the installation.

2.6 It is not anticipated the building security lighting for the industrial complex will create a noticeable, visible feature due to it being at a lower level and partially concealed by vegetation from the Study Area.

2.7 Also, it is not anticipated that the new lighting installation within the Study Area will impact on the industrial complex as it is primarily industrial in nature and not considered to have a high sensitivity to a change in the local lighting condition.

2.8 The bounding Chapel Terrace to the north east of the Study Area is provided with street lighting which appears to be installed in line with British Standards. This installation utilises 6m columns with dated luminaires which will not create a noticeable, visible feature within the night-time visual envelope for receptors as light will be obscured by the terraced dwellings.

2.9 The bounding Blackmoorfoot Road to the north west of the Study Area is provided with street lighting which appears to be installed in line with British Standards. This installation utilises 10-12m columns with a combination of LED and standard luminaires which will create a noticeable, visible feature within the night-time visual envelope for receptors with direct views of the installation.

2.10 To the south west of the site is ground associated with Oak CE(VC) Primary School which is unlit. Along this boundary is green infrastructure consisting of mature trees which lies within the Study Area will be retained. There are no light sources external to the Site which will create a noticeable, visible feature within the night-time visual envelope for receptors.

Site Context

2.11 The proposed site rises slightly going from east to west. It was previously a hospital but has since been demolished and removed from site. The site has been unoccupied for the last 7 years. Green infrastructure in the form of trees has been retained insitu around the south, south west and south east boundaries. This being more densely populated at the south west boundary. Refer to Figure 1.1 Illustrative Masterplan and Figure 2.1 Site Location Plan for a visual representation.

Site Lighting Context

2.12 The propose site does not contain existing permanent lighting.

Environmental Zone

2.13 The proposed site location is in a suburban zone E3 environmental zone. There is street lighting on the surrounding roads of the site. The lighting columns vary in height, age and luminaire type. The school grounds and adjacent grassland are unlit with a row of trees separating them from the Study Area. Residential properties on Blackmoorfoot Road and Chapel Terrace back directly onto the site.

ENVIRONMENTAL ZONES

It is recommended that Local Planning Authorities specify the following environmental zones for exterior lighting control within their Development Plans.

Environmental Zones

Zone	Surrounding	Lighting Environment	Examples
E0	Protected	Dark	UNESCO Starlight Reserves, IDA Dark Sky Parks
E1	Natural	Intrinsically dark	National Parks, Areas of Outstanding Natural Beauty etc
E2	Rural	Low district brightness	Village or relatively dark outer suburban locations
E3	Suburban	Medium district brightness	Small town centres or suburban locations
E4	Urban	High district brightness	Town/city centres with high levels of night- time activity

3. PROPOSED DEVELOPMENT

Proposed site and context change

3.1 The proposed site terrain is expected to consist of a high proportion of green infrastructure. The south west boundary will retain the existing mature wood and therefore be screened from the school beyond.

3.2 The site is expected to consist of a residential development consisting of 200 dwellings with associated infrastructure and open space; retail units; accommodation for potential neighbourhood; restaurant/public house and petrol filling station.

3.3 New green infrastructure will be planted to screen the new residential areas from the new retail area. Existing green infrastructure will be retained at the perimeter of the site along the boundary of the site in the form of mature trees.

3.4 An internal / residential area road is extended from just off Blackmoorfoot Road to provide vehicle access and egress to the residential properties.

3.5 Sources of new lighting effects that are expected to form the final proposed lighting condition include:

- Internal access roads; and
- Private Residential.

Proposed Site Lighting

3.6 A fixed lighting design has not been developed at this stage for the Former St. Luke's Hospital development. As such we have prepared an indicative lighting design that reflects:

- Environmental requirements and the applicable guidance / standards;
- Technical requirements and the applicable guidance / standards;
- Appropriate selection of lighting typologies to suite the above; and
- Local Authority requirements, where required, which will be identified by planning conditions.

3.7 The requirements of the Former St. Luke's Hospital development design consists of simple street lighting to provide illumination to meet the recommendations of BS 5489-1 Code of practice for the design of road lighting Part 1: Lighting of roads and public amenity areas.

3.8 A copy of the indicative lighting design layout is included in Appendix 1.

4. RECOMMENDATIONS

General recommendations

4.1 All external lighting, whether for the construction or operation phase, will comply with the recommended limitations given in the ILP Guidance Notes for an environmental zone E3 location. This limits emission of any upward light and helps to minimise light spill and glare.

Design Guidance (ILP Guidance Note 1)

Table 1 – Obtrusive Light Limitations for Exterior Lighting Installations

Environmental Zone	Sky Glow ULR [Max %] (1)	Light Trespass (into Windows) Ev [Lux] (2)		Source Intensity I [kcd] (3)		Building Luminance Pre-curfew (4)
		Pre- curfew	Post- curfew	Pre- curfew	Post- curfew	Average, L [cd/m2]
E1	0	2	1*	2.5	0	0
E2	2.5	5	1	7.5	0.5	5
E3	5.0	10	2	10	1.0	10
E4	15.0	25	5	25	2.5	25

ULR = **Upward Light Ratio of the Installation** is the maximum permitted percentage of luminaire flux for the total installation that goes directly into the sky.
Ev = **Vertical Illuminance in Lux** and is measured flat on the glazing at the centre of the window
I = **Light Intensity in Cd**
L = **Luminance in Cd/m2**
Curfew = **The time after which stricter requirements (for the control of obtrusive light) will apply**; often a condition of use of lighting applied by the local planning authority. If not otherwise stated - 23.00hrs is suggested.
***** = From Public road lighting installations only

4.2 All lighting applications are not required throughout all hours of darkness. Dimming facilities / capability shall be incorporated into the installation where appropriate. Lighting shall be switched off, in accordance with good practice guidance. As the Former St. Luke's Hospital lighting consists of street / road lighting the applicable adopting authority (if any) will have to be consulted to confirm the parameters of lighting controls to be incorporated.

4.3 It is recommended to limit placement of a new lighting installations to exclude habitat or areas recognized for foraging / commuting zones used by light sensitive species. If it is not possible to leave these areas unlit, it is recommended to ensure that luminaires are selected which utilise appropriate controls to limit the direction and intensity of the new light contribution.

4.4 Light colour should be addressed as part of the overall approach to the masterplan lighting design. Whiter light tends to be recommended for increased visual clarity for people driving and walking, so can be expected to be most appropriate for the Former St. Luke's Hospital development. The light colour should take due account of the existing neighbouring residential areas to ensure continuity as required.

4.5 For light quality, safety and wildlife effect limitation purposes LED light sources would be the recommended solution.

4.6 Spectral composition is somewhat related to light colour, but the effects are not always immediately apparent. It is desirable for light quality, safety and wildlife effect limitation

purposes to use LED technology. LEDs present good working efficacy, a smaller light emitting area which is good for light control and spectral compositions which are less disturbing to nocturnal wildlife or their food sources than UV rich traditional light sources.

Recommendations for Lighting

4.7 The use of street lighting style full horizontal cut-off luminaires installed at minimal tilt with flat glass lenses, back reflectors and internal optics is recommended to limit views of the lamp, control glare and direct light in a controlled pattern. This will help to minimise potential glare, sky glow, light spill and minimise visual intrusion to sensitive receptors.

4.8 Column height should be kept within the range of 4 – 6m maximum for residential streets, 6 – 8m maximum for larger access roads and car parks in most cases. We have currently utilised 6m columns which should be screened by the residences.

4.9 Functional and decorative lighting on private residential properties, post-sale or lease will be difficult to control unless restrictions are specified within lease contracts and property deeds.

4.10 It is recommended that lighting on private residential properties is restricted to adhere to requirements made within exterior Design Guidelines expected to be conditioned as part of this application and recommendations listed in the Clean Neighbourhoods and Environment Act, 2005.

4.11 New generation LED light sources are recommended for new external lighting.

4.12 Wattages shall achieve required light levels without over-lighting.

4.13 It is recommended to similarly review the prevailing light colour in the local area to ensure a consistent installation in terms of light colour.

5. ANALYSIS

Operational Effects

5.1 The effects of the Former St. Luke's Hospital lighting are considered to be long-term and permanent in nature.

5.2 An indicative design has been included to show the required lighting levels can be achieved whilst still minimising any associated light spill within the limits of the applicable guidance.

5.3 The final design will reflect the luminaire characteristics and recommended environmental constraints established in this report.

5.4 The final location of luminaires is not fixed and effects should be reviewed during more detailed design phases.

5.5 Key considerations of Former St. Luke's Hospital lighting include:

- Utilisation of full cut-off luminaires to reducing potential views of light sources and contribution to sky glow.
- Incorporation of dimming or shut off of lighting that is not required throughout the night in addition to thoughtful design which does not provide light to areas which have a confirmed requirement for strict light control
- Controlled residential lighting for personalisation
- The majority of new lighting will be below the level of boundary landscape where existing which will help obstruct views of the site for the majority of the year from off-site and limit effects to green areas and corridors internal to the site. Additional restricting column heights to 6m provides further screening from the new properties themselves.

5.6 New lighting internal to the site is expected to be largely obscured from off-site by the landform, buildings and landscape comprising the new masterplan, limiting the potential for direct views of new lighting. This is expected to result in an overall limited perceptible change from the existing lighting condition from a distance. This is considered to be perceived as a negligible change with respect to light spill and glare for local residential properties and a low to medium level of noticeable change with respect to sky glow.

5.7 Lighting near wildlife / habitat areas is expected to be strictly controlled, and the majority of heavily landscaped areas and green corridors will remain unlit. There will be some street lighting as part of the access route through the site. The potential for light spill and glare will be controlled, but new lighting will still be introduced into predominantly dark spaces and may be described as a low to medium level of change. A medium level of change is expected with respect to sky glow.

5.8 Effects created by light spill and glare are expected to be generally negligible to minor adverse with respect to light spill and glare, and minor to moderate adverse with respect to sky glow. This has been minimised as far as practicable by utilising luminaires

with 0% upward light ration (ULR) and achieving the required levels with no additional tilt to the head position, so a true flat glass installation.

5.9 Tested parameters are expected to introduce a negligible level of change to wildlife / habitat receptors at further distances.

5.10 Light intrusion through vertical windows on the existing streets which surrounding the new development has been assessed by measurement. This has resulted in calculations which confirm that the new development will cause no light spill (0 Lux) through the existing dwelling windows. Refer to Appendix 1: Proposed External Lighting Layout calculation summary table for further details.

6. CONCLUSION

6.1 A review has been made of the potential impact created by new lighting in relation to the proposed Former St. Luke's Hospital development.

6.2 Legislation, British standards and good practice guidance indicate the development requires new exterior lighting for purposes of vehicular and pedestrian safety.

6.3 The likely significant effects created by new lighting indicate effective management of direct lighting effects can be achieved.

6.4 Potentially significant effects from the operation phase lighting on residential and wildlife / habitat receptors can be managed to create a minimal night-time impact with the most noticeable lighting contribution being a small increase to local area sky glow.

6.5 The proposed Former St. Luke's Hospital lighting is expected to have a negligible level of change with respect to local residential properties and a generally minor to moderate adverse effect on areas containing sensitive wildlife / habitat.

6.6 The indicative lighting design presented indicates the potential significant effects from new lighting for the proposed development can be adequately managed and all tested parameters are expected to meet recommended guidance benchmarks.

6.7 The indicative lighting design presented indicates the proposed lighting installation can achieve the required minimum lighting levels and distribution to meet the applicable standards.

6.8 The indicative lighting design presented indicates the proposed lighting installation can contain all lighting overspill within the site boundary and as such cause no light trespass to the adjoining land.

6.9 The impact of the Former St. Luke's Hospital lighting is considered to be generally negligible with respect to residential properties and minor to moderate adverse in direct relation to wildlife / habitat locations on site, resulting in a negligible effect at local, regional and national levels. The most noticeable effect due to the proposed lighting installation expected to remain is sky glow.

6.10 Lighting calculations demonstrate the indicative lighting design presented will cause no light intrusion through the vertical windows of the existing dwellings which bound the proposed new site.

APPENDICES

APPENDIX 1: Proposed External Lighting Layout

Qty	Range	Light Source	Lamp Lumens	Circuit Watts	Lm/W	LOR	Luminaire Lumens	ULOR	Upward Lmns	RA	ART Hours Per Day	CO² Calculation for year	
												CO² (Tonnes)	Kwhour
69	Italo 1	STE-M - 525mA 1 lf module	2010	19	105.79	100.0%	138690	0.0%	0	70	12	3.13	5742.18

Total Installation Lumens	138690.00	Total ULR	0.00%

Table 1 compliance	
Environmental zone	E3

Sky Glow	Target	Achieved	Status
	5.00%	0.00%	Pass

Source Intensity (candelas)			
Per curfew	10,000	488	Pass
Peak curfew	1,000	488	Pass

Light Trespass into windows (Lux)			
Per curfew	10	1	Pass
Peak curfew	2	1	Pass

Building Luminance (cd/m²)	10	

Calculation Summary							
Label	CalcType	Units	Avg	Max	Min	Min/Avg	Min/Max
Blackmoorfoot Road 2_Cd_Seg1	Obtrusive Light - Cd	N.A.	22.41	488	1	0.04	0.00
Blackmoorfoot Road 2_Cd_Seg2	Obtrusive Light - Cd	N.A.	5.21	11	1	0.19	0.09
Blackmoorfoot Road 2_Cd_Seg3	Obtrusive Light - Cd	N.A.	3.73	20	0	0.00	0.00
Blackmoorfoot Road 2_Ill_Seg1	Obtrusive Light - Ill	Lux	0.03	1	0	0.00	0.00
Blackmoorfoot Road 2_Ill_Seg2	Obtrusive Light - Ill	Lux	0.00	0	0	N.A.	N.A.
Blackmoorfoot Road 2_Ill_Seg3	Obtrusive Light - Ill	Lux	0.00	0	0	N.A.	N.A.
Blackmoorfoot Road_Cd_Seg1	Obtrusive Light - Cd	N.A.	5.32	19	1	0.19	0.05
Blackmoorfoot Road_Cd_Seg2	Obtrusive Light - Cd	N.A.	10.22	20	2	0.20	0.10
Blackmoorfoot Road_Cd_Seg3	Obtrusive Light - Cd	N.A.	8.44	86	1	0.12	0.01
Blackmoorfoot Road_Cd_Seg4	Obtrusive Light - Cd	N.A.	34.67	149	1	0.03	0.01
Blackmoorfoot Road_Cd_Seg5	Obtrusive Light - Cd	N.A.	1.85	17	0	0.00	0.00
Blackmoorfoot Road_Ill_Seg1	Obtrusive Light - Ill	Lux	0.00	0	0	N.A.	N.A.
Blackmoorfoot Road_Ill_Seg2	Obtrusive Light - Ill	Lux	0.00	0	0	N.A.	N.A.
Blackmoorfoot Road_Ill_Seg3	Obtrusive Light - Ill	Lux	0.00	0	0	N.A.	N.A.
Blackmoorfoot Road_Ill_Seg4	Obtrusive Light - Ill	Lux	0.00	0	0	N.A.	N.A.
Blackmoorfoot Road_Ill_Seg5	Obtrusive Light - Ill	Lux	0.00	0	0	N.A.	N.A.
Chapel Terrace_Cd_Seg1	Obtrusive Light - Cd	N.A.	10.57	31	1	0.09	0.03
Chapel Terrace_Cd_Seg2	Obtrusive Light - Cd	N.A.	12.51	56	1	0.08	0.02
Chapel Terrace_Cd_Seg3	Obtrusive Light - Cd	N.A.	14.70	48	2	0.14	0.04
Chapel Terrace_Cd_Seg4	Obtrusive Light - Cd	N.A.	7.89	24	1	0.13	0.04
Chapel Terrace_Cd_Seg5	Obtrusive Light - Cd	N.A.	4.08	9	1	0.25	0.11
Chapel Terrace_Ill_Seg1	Obtrusive Light - Ill	Lux	0.00	0	0	N.A.	N.A.
Chapel Terrace_Ill_Seg2	Obtrusive Light - Ill	Lux	0.00	0	0	N.A.	N.A.
Chapel Terrace_Ill_Seg3	Obtrusive Light - Ill	Lux	0.00	0	0	N.A.	N.A.
Chapel Terrace_Ill_Seg4	Obtrusive Light - Ill	Lux	0.00	0	0	N.A.	N.A.
Chapel Terrace_Ill_Seg5	Obtrusive Light - Ill	Lux	0.00	0	0	N.A.	N.A.
Nabcroft Lane_Cd_Seg1	Obtrusive Light - Cd	N.A.	11.46	55	1	0.09	0.02
Nabcroft Lane_Cd_Seg2	Obtrusive Light - Cd	N.A.	13.11	51	1	0.08	0.02
Nabcroft Lane_Cd_Seg3	Obtrusive Light - Cd	N.A.	4.08	9	1	0.25	0.11
Nabcroft Lane_Cd_Seg4	Obtrusive Light - Cd	N.A.	3.53	7	1	0.28	0.14
Nabcroft Lane_Cd_Seg5	Obtrusive Light - Cd	N.A.	11.81	55	1	0.08	0.02
Nabcroft Lane_Cd_Seg6	Obtrusive Light - Cd	N.A.	7.00	28	1	0.14	0.04
Nabcroft Lane_Cd_Seg7	Obtrusive Light - Cd	N.A.	9.07	25	1	0.11	0.04
Nabcroft Lane_Cd_Seg8	Obtrusive Light - Cd	N.A.	1.00	2	0	0.00	0.00
Nabcroft Lane_Ill_Seg1	Obtrusive Light - Ill	Lux	0.00	0	0	N.A.	N.A.
Nabcroft Lane_Ill_Seg2	Obtrusive Light - Ill	Lux	0.00	0	0	N.A.	N.A.
Nabcroft Lane_Ill_Seg3	Obtrusive Light - Ill	Lux	0.00	0	0	N.A.	N.A.
Nabcroft Lane_Ill_Seg4	Obtrusive Light - Ill	Lux	0.00	0	0	N.A.	N.A.
Nabcroft Lane_Ill_Seg5	Obtrusive Light - Ill	Lux	0.00	0	0	N.A.	N.A.
Nabcroft Lane_Ill_Seg6	Obtrusive Light - Ill	Lux	0.00	0	0	N.A.	N.A.
Nabcroft Lane_Ill_Seg7	Obtrusive Light - Ill	Lux	0.00	0	0	N.A.	N.A.
Nabcroft Lane_Ill_Seg8	Obtrusive Light - Ill	Lux	0.00	0	0	N.A.	N.A.
Roadway	Illuminance	Lux	7.69	23	2	0.26	0.09
Sunningdale Road_Cd_Seg1	Obtrusive Light - Cd	N.A.	6.35	36	1	0.16	0.03
Sunningdale Road_Ill_Seg1	Obtrusive Light - Ill	Lux	0.00	0	0	N.A.	N.A.

Luminaire Schedule					
Symbol	Qty	Label	Arrangement	LLF	Description
	69	A	SINGLE	0.900	20.5w (1 module) 525mA Italo 1 with STE-M Optic column mounted at 6m

Notes

1. Do not scale this drawing. All dimensions must be checked/ verified on site, If in doubt ask.
2. This drawing is to be read in conjunction with all relevant architects, engineers and specialists drawings and specifications.
3. All dimensions in millimetres unless noted otherwise. All levels in metres unless noted otherwise.
4. Any discrepancies noted on site are to be reported to the engineer immediately.

Key Plan

Site Boundary

Rev	Date	Details of issue / revision	Drw.	Rev.
P2	29.08.18	Redline boundary shown	LA	BQ
P1	22.08.18	Issued For Information	GEM	BQ

Issues & Revisions

BWB
CONSULTANCY | ENVIRONMENT
INFRASTRUCTURE | BUILDINGS
Birmingham | 0121 233 3322
Leeds | 0113 233 8000
London | 020 7407 3879
Manchester | 0161 233 4260
Nottingham | 0115 924 1100
www.bwbconsulting.com

Client

AVANT homes

Project Title

ST LUKE'S HOSPITAL HUDDERSFIELD

Drawing Title

ELECTRICAL SERVICES PROPOSED EXTERNAL LIGHTING LAYOUT ALL FLOORS

Drawn:	G. E. Maher	Reviewed:	B. Quinn
BWB Ref:	LDP2217	Date: 22.08.18	Scale@A0: 1:500

Drawing Status

INFORMATION

Project - Originator - Zone - Level - Type - Role - Number	Status	Rev
LUK-BWB-00-XX-DR-E-2301	S2	P2

APPENDIX 2: Proposed Luminaire Type

Kingfisher Lighting

Datasheet

Italo Street

One product, three sizes. The Italo series offers high performance functionality, versatility and a wide variety of optics. A versatile solution suitable for any street application.

Key Features

- 525mA & 700mA
- Efficacy 138 luminaire lm/W
- 4000K, CRI >70
- Lifetime >100,000hr L80
- Post Top 76mm, side entry 76mm
- Driver included

60mm post-top and side-entry spigots available.
76mm recommended. Call for further details.

Applications

- Street lighting
- Highways
- Area lighting
- Car parks
- Parks & plazas

LED | IP66 | IK09 | DIM | Controls Compatible

Italo also available in urban and flood options.
See separate datasheets for details.

Fitting		Luminaire Lumens	LED Lumens	Power	Optics
S05	Italo 1	1,520 - 8,210	1,841 - 9,820	15.5W - 76W	S05 asymmetrical suburban street optic
	Italo 2	8,310 - 16,240	9,697 - 19,640	74W - 152W	
	Italo 3	15,280 - 31,000	17,455 - 36,825	131W - 286W	
STU-S	Italo 1	1,520 - 8,210	1,841 - 9,820	15.5W - 76W	STU-S asymmetrical suburban street optic
	Italo 2	8,310 - 16,240	9,697 - 19,640	74W - 152W	
	Italo 3	15,280 - 31,000	17,455 - 36,825	131W - 286W	

Fitting		Luminaire Lumens	LED Lumens	Power	Optics
STU-M	Italo 1	1,520 - 8,210	1,841 - 9,820	15.5W - 76W	STU-M asymmetrical suburban street optic
	Italo 2	8,310 - 16,240	9,697 - 19,640	74W - 152W	
	Italo 3	15,280 - 31,000	17,455 - 36,825	131W - 286W	
SV	Italo 1	1,520 - 8,210	1,841 - 9,820	15.5W - 76W	SV asymmetrical suburban street optic
	Italo 2	8,310 - 16,240	9,697 - 19,640	74W - 152W	
	Italo 3	15,280 - 31,000	17,455 - 36,825	131W - 286W	
STE-S	Italo 1	2,010 - 11,270	2,475 - 13,200	20W - 102W	STE-S asymmetrical suburban street optic
	Italo 2	11,450 - 19,030	13,035 - 23,100	98W - 183W	
	Italo 3	19,550 - 32,510	23,463 - 39,600	173W - 303W	
STE-M	Italo 1	2,010 - 11,270	2,475 - 13,200	20W - 102W	STE-M asymmetrical suburban street optic
	Italo 2	11,450 - 16,630	13,035 - 19,800	98W - 148W	
	Italo 3	17,670 - 32,510	20,856 - 39,600	150W - 303W	
STW	Italo 1	2,010 - 11,270	2,475 - 13,200	20W - 102W	STW asymmetrical suburban street optic
	Italo 2	11,450 - 16,630	13,035 - 19,800	98W - 148W	
	Italo 3	17,670 - 32,510	20,856 - 39,600	150W - 303W	

Specifications

Weight	6.8-19 kg
Windage	Italo 1: 0.05-0.18m^2 Italo 2: 0.08-0.3m^2 Italo 3: 0.1-0.4m^2
Material	Die-cast aluminium
Paint Finish	Graphite grey

Specification Text

The luminaire shall be manufactured from high pressure die-cast aluminium. It shall have an LED efficacy of up to 151 luminaire lm/W and will be capable of producing up to 32,510 luminaire lumens at 4000K with a CRI >70. A number of optics will be available and the luminaire will be rated at IP66 and IK09. The optical design will be a reflector-based optic with glass screen.

Dimensions

Italo 1

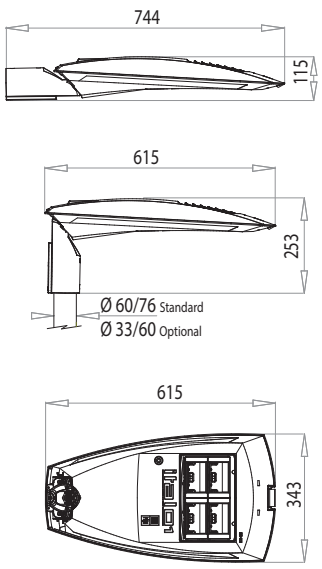

Italo 2

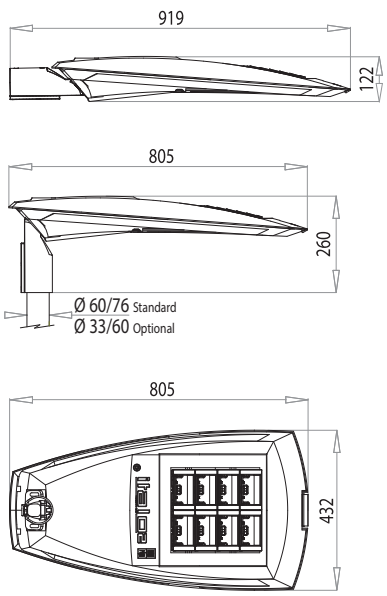

Italo 3

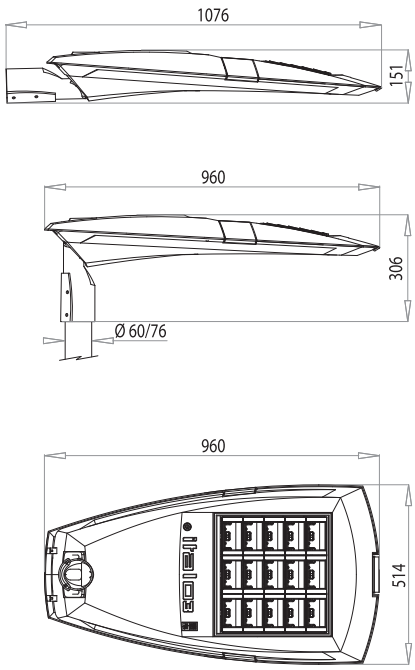

All units of measurement in mm.

BWB

BETTER SOLUTIONS, INTELLIGENTLY ENGINEERED

www.bwbconsulting.com