Uncontrolled When Printed

ITEM	QTY	PART N°	MATERIAL	DESCRIPTION
1	1	SEE CHART	ALUMINIUM CASTING	DOUBLE REAR ENCLOSURE ASSY
2	1	SEE CHART	ALUMINIUM CASTING	DOUBLE REAR ENCLOSURE ASSY
3	1	B20.19097	3 MM ALUMINIUM FABRICATION	OUTER COVER
4	1	B20.19152	3MM ALUMINIUM FABRICATION	"A" FRAME
5	1	B19.18015	NYLON	M32 GPL CABLE GLAND
6	1	PADS 0086/029003	BRASS	RKB221 PADLOCK

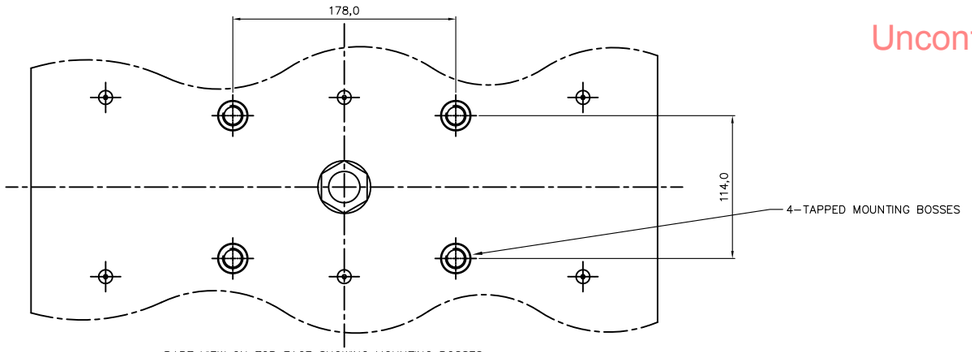

PART VIEW ON TOP FACE SHOWING MOUNTING BOSSES

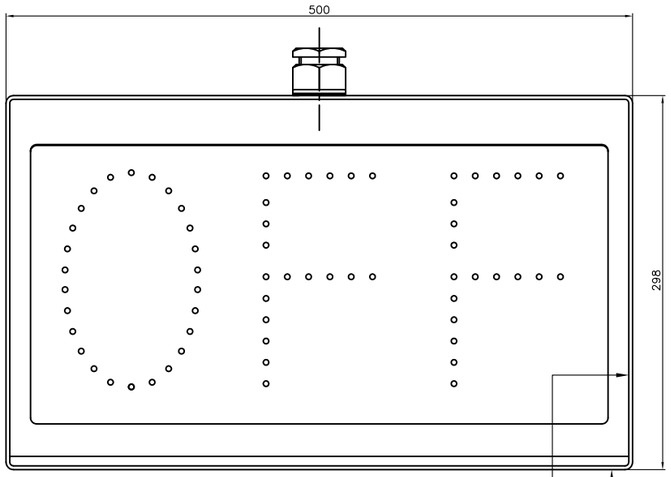

STENCIL INDICATOR S/OFF-------/1D
SHOWN FOR ILLUSTRATION ONLY

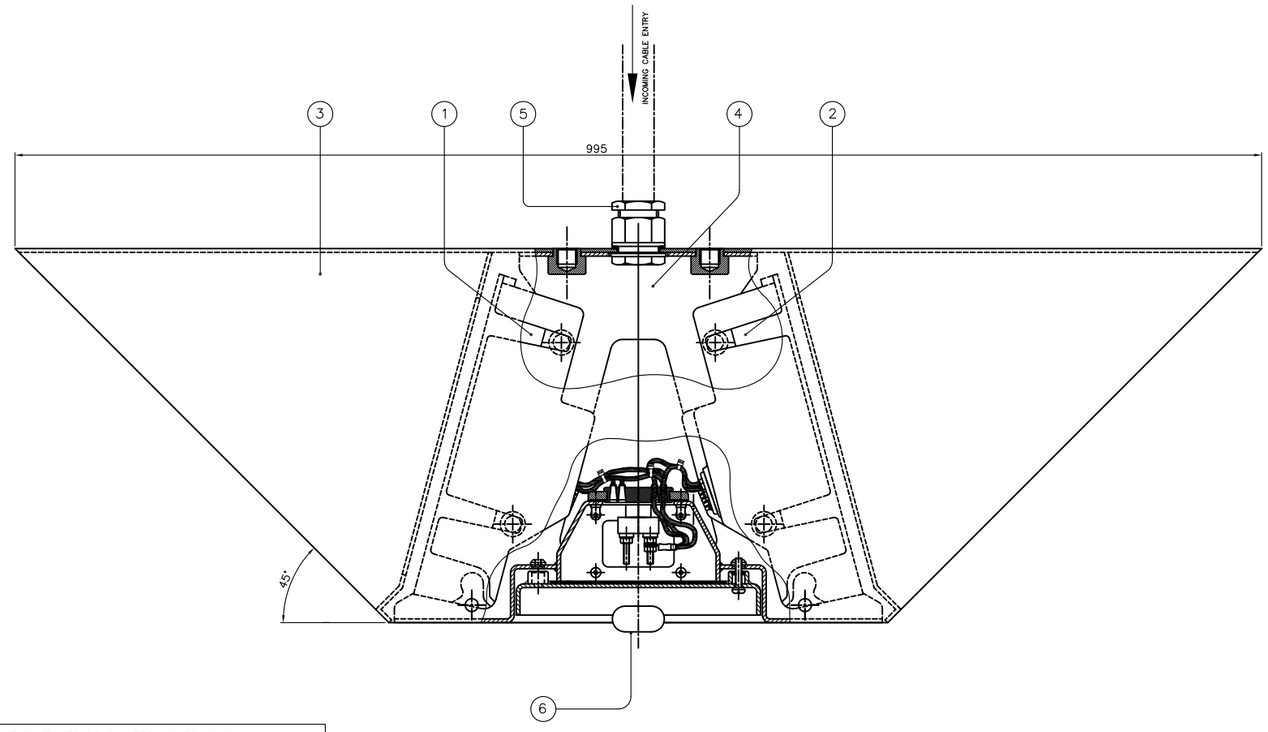

OUTSIDE FACES AND INTERNAL FRONT FACES TO BE PAINTED AS FOLLOWS
ETCH PRIMER 2 PACK –BASE BR SPEC 81 ITEM 104A
ACID BR SPEC 81 ITEM 104B
TOP COAT – MICACEOUS IRON OXIDE MATT BLACK BR SPEC 70 ITEM 30

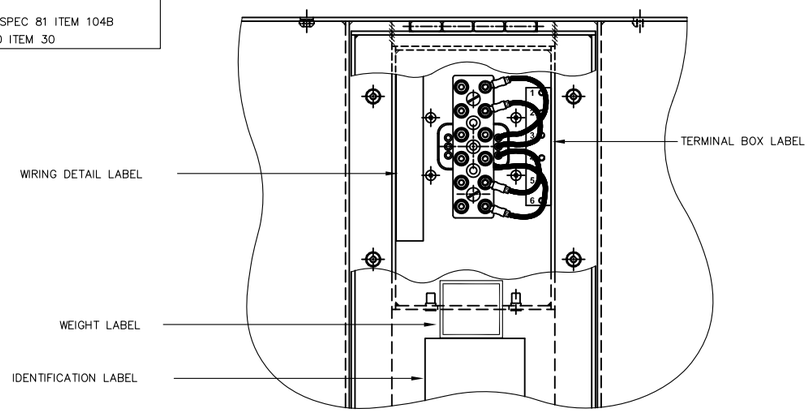

ITEM 1

PADS No.	DORMAN PART No.	DESCRIPTION	REAR ENCLOSURE ASSY PART No
086/021021	S/OFF:OFF---/ID	DOUBLE STENCIL INDICATOR,OFF,110v,PROVING	D82.81020
086/021021	S/S–(SPECIAL 1 IINDICATION)–/ID	DOUBLE STENCIL INDICATOR,SPECIAL,110v,PROVING	CONTACT DORMAN SALES–RAIL
086/021021	S/S–(SPECIAL 2 INDICATION)–/ID	DOUBLE STENCIL INDICATOR,SPECIAL,110v,PROVING	CONTACT DORMAN SALES–RAIL
086/021021	S/S–(SPECIAL 3 INDICATIONS)–/ID	DOUBLE STENCIL INDICATOR,SPECIAL,110v,PROVING	CONTACT DORMAN SALES–RAIL
086/021021	S/S–(SPECIAL 4 INDICATIONS)–/ID	DOUBLE STENCIL INDICATOR,SPECIAL,110v,PROVING	CONTACT DORMAN SALES–RAIL

NOTE:–IF NOT COVERED IN THE ABOVE TABLE, A CUSTOMER SPECIFIC INDICATOR ORDER MUST QUOTE THIS DRAWINGS GENERIC PADS NUMBER AND THE DORMAN PART NUMBER.

THE DORMAN PART NUMBER COMPRISES A 15–DIGIT CODE, SIGNIFYING THE FOLLOWING:–

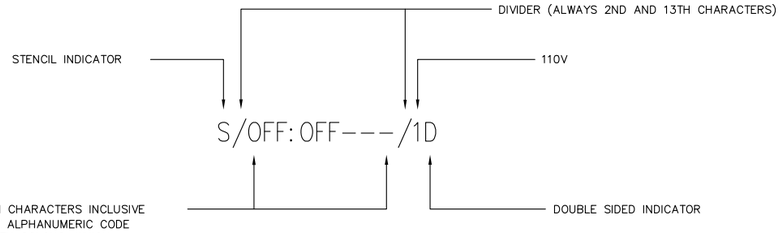

3RD TO 12TH CHARACTERS INCLUSIVE CONTAIN THE ALPHANUMERIC CODE TOGETHER WITH COLONS, WHICH SIGNIFY THE LETTERS AND NUMBERS TO BE DISPLAYED AND THE NUMBER OF SWITCHING CIRCUITS.

e.g. S/R:5:MR:5:M/1D

THE ABOVE DENOTES A STENCIL INDICATOR WHICH DISPLAYS R 5 M, INDEPENDANTLY CONTROLLED BY THREE CIRCUITS OPERATING ON 110V SUPPLY AND IS A DOUBLE SIDED UNIT, THE SAME DISPLAY AND CONTROL CIRCUITS BEING REPEATED FOR THE SECOND SIDE. (THE COLONS BETWEEN R, 5 AND M, SIGNIFIES THAT EACH LETTER HAS ITS OWN CIRCUIT).

DO NOT SCALE

ALL DIMENSIONS IN mm UNLESS OTHERWISE STATED

DORMAN REF No.
GENERIC DOUBLE MINIATURE ALPHANUMERIC ROUTE INDICATOR

CUSTOMER REF No.

TITLE
DOUBLE MINIATURE ALPHANUMERIC ROUTE INDICATOR ASSY

MATERIAL

TOLERANCES		
X	+ / –	0,25
X,0	+ / –	0,10
X,00	+ / –	0,05
X,000	+ / –	0,025
ANGULAR	+ / –	0.25°

THIRD ANGLE PROJ
Document N° a100–2211–1
DRAWN BT
APPROVED LG
DATE 01/06/2005
SCALE 1:1
SHEET 1 OF 1 SHEETS

ISS	DATE	INI	ALTERATIONS
1	22/01/07	BT	SEE DCC 3449
0	07/06/05	BT	DCC No. 2809

DORMAN
SOUTHPORT PR9 8LA ENGLAND

THIS DOCUMENT AND THE INFORMATION THEREIN IS CONFIDENTIAL AND MAY NOT BE USED OR DISCLOSED WITHOUT WRITTEN AUTHORIZATION

DRAWING No PART No.
GENERIC DOUBLE MINIATURE ALPHANUMERIC ROUTE INDICATOR

ISSUE 1

ORIGINAL DRAWING FRAME A1 | DO NOT SCALE