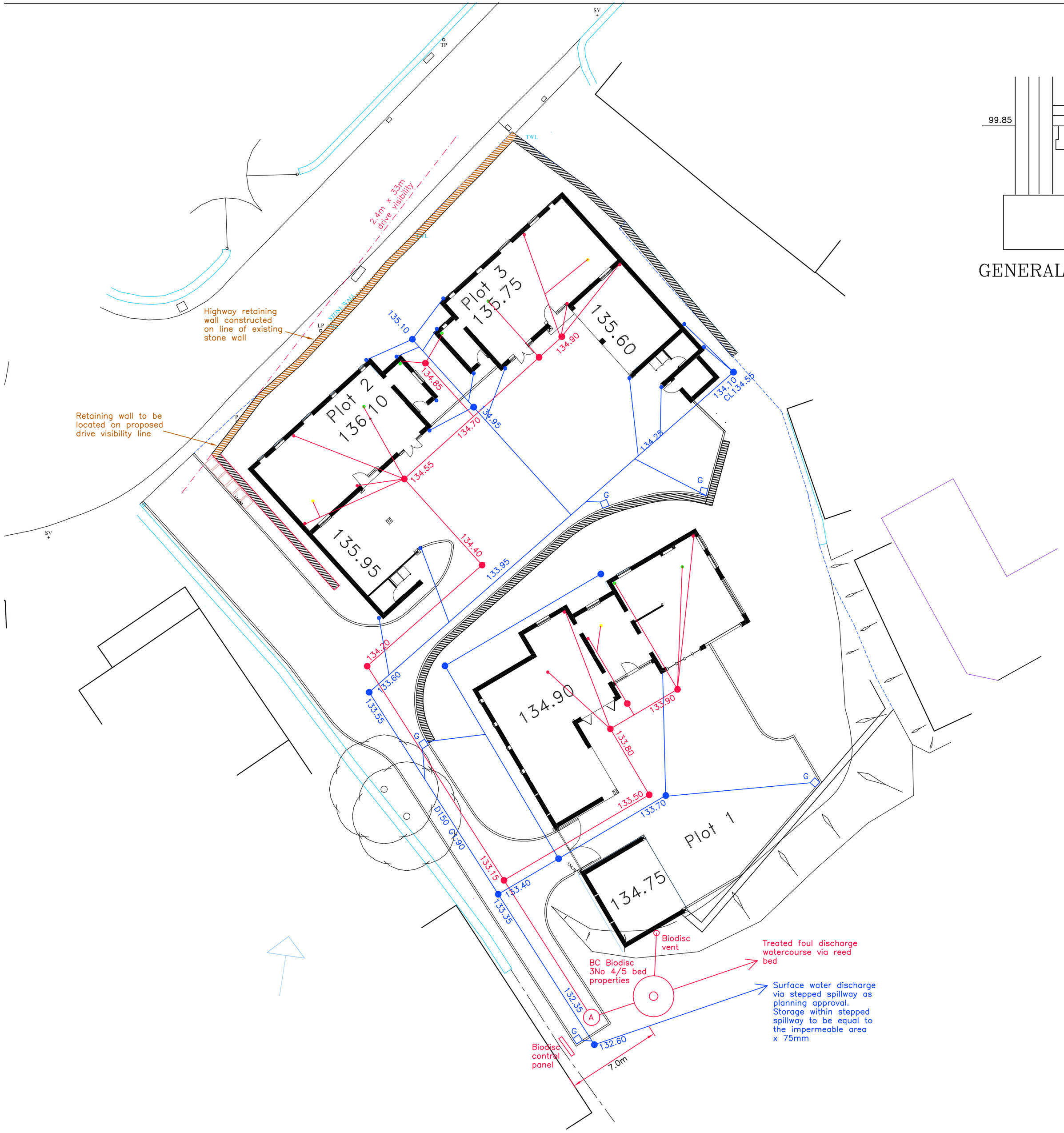

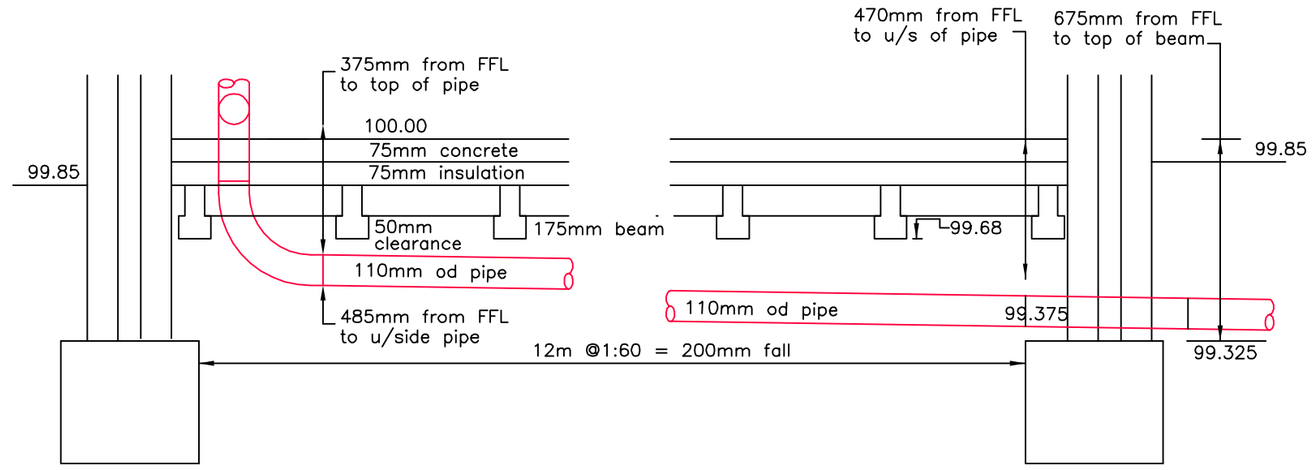

GENERAL GUIDANCE DETAIL

PRIVATE DRAINAGE

All drainage to comply with BS8301
100mm drains to be laid at minimum gradient 1 : 80. 150mm drains to be laid at minimum gradient 1 : 150.
All drainage to be 100mm diameter, unless otherwise stated. All final connections to main sewer to be 150mm diameter. All connections joints to remain flexible.
Drains passing under buildings to be retained flexible with a bed and surround of pea gravel. All drains to be bridged over with concrete lintels when passing through walls.
All foundations to be taken below invert level of localized drains where within 1.00m of foundations.
All sink wastes not connected to an inspection chamber or manhole to be connected via a roddable gully.
225mm dia inspection chambers to be laid at a maximum depth of 600mm below finished ground level.
450mm dia inspection chambers to be laid at a maximum depth of 1200mm below finished ground level.
1200 x 1000mm pc concrete sections to BS 5911 to be laid at a maximum depth of 3.00m below finished ground level.

Rodding eye

Road gully

C. Visibility dimensions revised 8–6–18
B. Plot 1 FFL revised, Highway retaining wall moved on to drive visibility splay, section AA revised 8–6–18
A. Revised following meeting with client. Highway cross added 6–6–18

R.A.B. ENGINEERING DESIGN LTD
12 BERRY HOLME CLOSE
SHEFFIELD S35 1AB
TEL.(0114)2464871

G9 Design

Poplar Farm, Dewsbury
Private drainage

DRAWN BY rab
SCALE 1:200 (A2) DATE Feb17
DRAWING No 1081-11 REV C

PRELIMINARY ONLY