Sign A
Scale 1:50 @A3

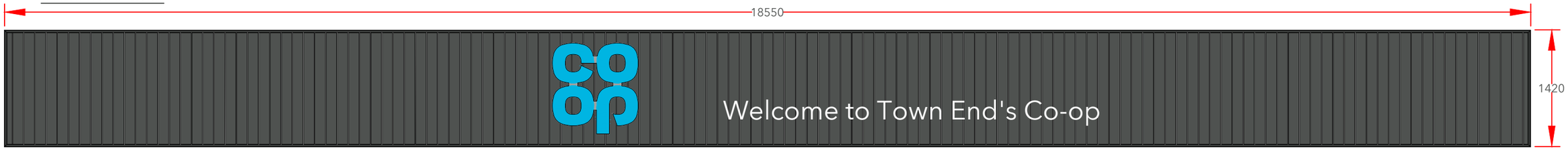

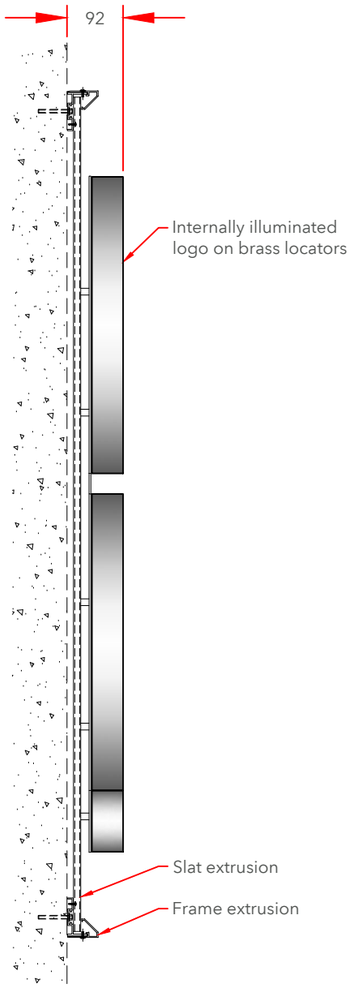

Logo Cross Section
Scale 1:10 @A3

Sign A Specifications:

Fascia
Aluminium slat fascia to suit site conditions.

Fascia constructed from individual Aluminium extrusions. Perimeter support extrusion fixed to the building substrate with suitable fixings, Aluminium vertical slats mounted and fixed to the support extrusion and trimmed around the perimeter with a chamfered trim.

Slat and trim to be finished Dark Grey Wood effect:
Decoral powder coating: 8G-940-A005 (lab code FP 714/38)
Decoral sublimatic Film: 2217/19 L.
(CFP-EX-I/M & CFP-EX-G/DG & CFP-EX-H/DG & CFP-EX-A/DG)

Logo
1100mm Single sided built up logo.(CFP-L-WM1100-WM/B)
Steel mounting plate with individual built-up internally illuminated letters.Mounting plate to be 3mm Mild Steel fixed to building substrate with brass locator fixings.

3D built-up letters to have aluminium sides, 50mm deep with 5mm Co-op BLUE acrylic faces. All visible edges, aluminium returns & mounting plate to be finished Silver RAL 9006 60% gloss.
Internally illuminated by white LEDs.

Letters
"Welcome to Anytown Co-op" 322mm to match 1100mm logo to be from 5mm WHITE Perspex 069 Acrylic on locator snap fixings.(CFP-WL1100-A/W)

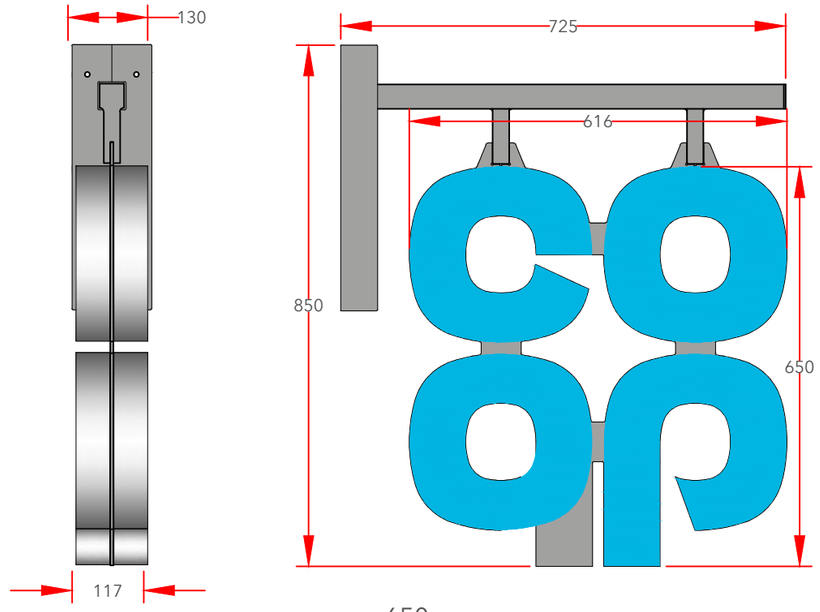

650mm
Scale 1:10 @A3

Sign B Specifications:

Projection sign size 650mm Internally Illuminated built up letters on both sides. Individual 3D letters constructed from silver aluminium side returns and Co-op BLUE acrylic faces - faces only to illuminate.

Fully welded 5mm Mild Steel wall mounting plate and support frame. Profile cut logo mounting plate from 5mm Mild Steel, welded to the hanging tubes. All visible steel work to be finished silver to match RAL 9006 60% gloss.(CFP-P-FF0650/B).

Collections

Store Name:	Golcar
Store No:	4983
Futurama W.O:	129755
Store Type:	Everyday Convenience - Mainstream
Programme:	Rollback
CAD reference:	P7F7M3
Address:	119 Town End Golcar Huddersfield West Yorkshire - HD7 4QA
Revision:	-
Original Scheme:	IS

Olympia House
Lockwood Court
Middleton Grove
Leeds
LS11 5TY
United Kingdom

Telephone:
0113 270 5595
Facsimile:
0113 277 1143
E-mail:
postbox@futurama.ltd.uk

delivering branded environments™

futurama