RHEINZINK®



ROOFING

System Solutions for Roofs

SYSTEM OVERVIEW

Foreword

If the best material curtails creativity, what good is it? If the best idea cannot be realized, what good is it? Materials that foster creativity and lend form to ideas are required for individual solutions, as are consulting services that take technical perfection, structural physics and aesthetics into consideration.

RHEINZINK offers all of the above. Not only does the name stand for unique creative material to clad roofs and facades, but also for exemplary service to implement your ideas – regardless of the size of your project – big or small. We offer solutions that are as unique as your project. A comprehensive range of RHEINZINK roofing, facade, and the solar system product, along with diverse installation techniques, make it easy to find a perfect solution for every design.

RHEINZINK is extremely malleable; it is compatible with every architectural environment and its aesthetic is timeless. Furthermore, requirements for sustainable building using natural material are met without difficulty. RHEINZINK is absolutely maintenance and service free. Its lifetime comprises several generations and that, in and of itself, sets standards; its ecological balance is exemplary.

The examples in this brochure illustrate the design potential of RHEINZINK, along with various options available to you by using this ecological material.

Datteln, January 2013





Schwielowsee Resort, Werder, Germany



„Il sogno di Ivana", Turin, Italy



Česká pojišťovna Pankrác – Administrative Building, Prague, Czech Republic

RHEINZINK-Double Standing Seam

The double standing seam is a further development of the original hollow folded joint or single standing seam. This reliable system has been referenced in technical literature since 1899 and is the top choice for roof pitches from 3° to 25°. Here, the name "double standing seam" characterises one of the conventional types of longitudinal joints above the water level. A fine-lined seam height of 25 mm is rainproof without any additional measures. The double standing seam, manufactured with pre-profiled panels, has gained international recognition. Seams are folded and closed manually or with a seaming machine. Custom shapes such as convex and concave curves and conical panels are produced without difficulty. Thanks to a multitude of detail variations, the double standing seam emphasizes both traditional and modern architectural design.

- **Intricate shapes possible including convex and concave curves**
- **High degree of design freedom**
- **Panel lengths up to 16 m**
- **Suitable for all roof types with pitches from 3° to 25°and solar solutions**
- **Environmentally friendly declared product**

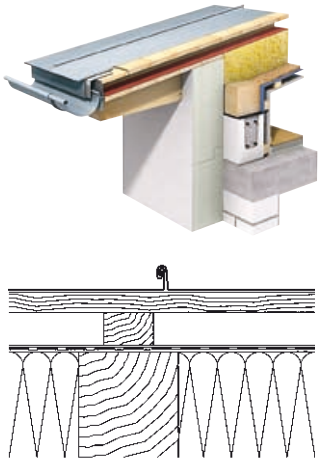

Fig. Cover page: Dorothy House Hospice, Bradford on Avon, United Kingdom
Fig. Left: Schwielowsee Resort, Werder, Germany



Private Residence, Stavoren, Netherlands



Private Residence Montaña del Socorro, Tafira Baja, Spain



Private Residence Möllmann, Bielefeld, Germany

RHEINZINK-Angled Standing Seam

Within conventional sheet metal techniques, the angled standing seam is a relatively new development; it has only been referenced in technical literature since the beginning of the 20th Century. Closing the seam of a pre-profiled panel is very easy compared with the double standing seam. The angled standing seam is completed simply by folding in one leg. It is particularly suitable for visible design areas on metal roofs where the pitch is greater than 25°, as well as for rounded parapets, attics or mansard roofs – in a conventional vertical, diagonal or horizontal application. As the angled standing seam looks wider than the double standing seam, it lends a vibrant, distinctive structure to large surface projects.

- **Design through distinct lines**
- **Cost-efficient for virtually every building style**
- **For roof pitches more than 25°**
- **Roof-applied solar solutions possible**
- **Environmetally friendly declared product**

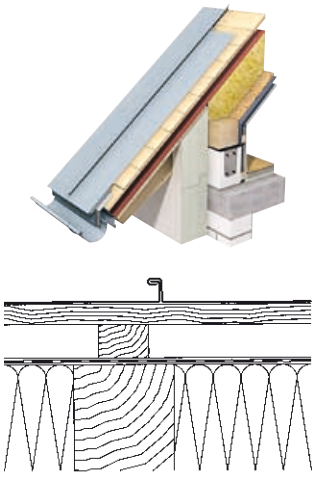



Hôtel du Louvre, Paris, France



Event Hall, Prague, Czech Republic



University of Fine Arts, Dresden, Germany

RHEINZINK-Click Roll Cap

The roll cap system with battens is one of the more traditional of today's prevailing sheet metal work techniques. The name "Click Roll Cap System" stands for a type of longitudinal joint, whereby the RHEINZINK-Click Roll Cap Fastener, made of galvanized steel, is used as a fastener between the panels. Both fastening alternatives are covered with a roll cap. Efficient system installation is telling. Prefabricated adjustable profiles support the design quality and sophisticated look. The dominant longitudinal joints typical of the click roll cap system create a strong structural effect; the interplay of light and shadow is striking and charming. This lends itself to interesting design possibilities for both roofs and large curtain walls. An even greater wealth of variations exists when the roll cap system is combined with double standing seam techniques.

- **Bolder seam definition with roll cap joints**
- **Panel lengths of up to 20 m possible**
- **Additional design approach by combination with double standing seam technique**
- **Environmentally friendly declared product**

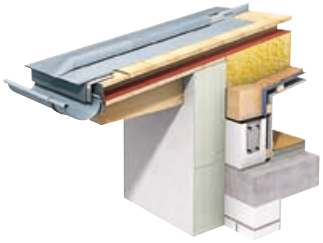

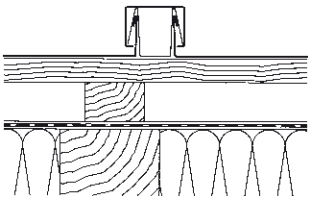



Hotel Kempinski, Hohe Tatra, Slovak Republic



Elisabeth Heilbad, Miskolc, Hungary



Kaplan Residence, Illinois, USA

RHEINZINK-Tiles

Tiles are becoming more and more popular for roofing as well. Small RHEINZINK-Tiles (square and diamond-shaped) provide secure and aesthetically pleasing solutions, even for geometrically complicated building designs. Dormer, chimney head and roof edge cladding counts as part of conventional tile utilization. RHEINZINK-Flat-Lock Tiles are most effective for large roof areas and curtain walls. These represent a further development of the diamond-shaped and square tiles; they are impressive, not only because of their aesthetic appeal, but because of the design benefits. Using different sizes of tiles opens up a multitude of facade design possibilities.

- **Distinct roof covering with a selection of tile sizes**
- **Smaller square or diamond shaped tiles as well as bigger flat-lock tiles available**
- **Perfect for curvelinear surfaces**
- **High degree of design freedom**
- **Environmentally friendly declared product**

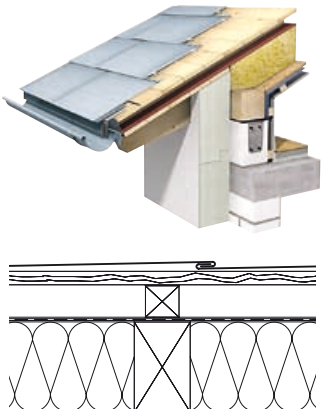

Fig. Right: Domkuppel San Pietro, Gattinara, Italy



RHEINZINK®

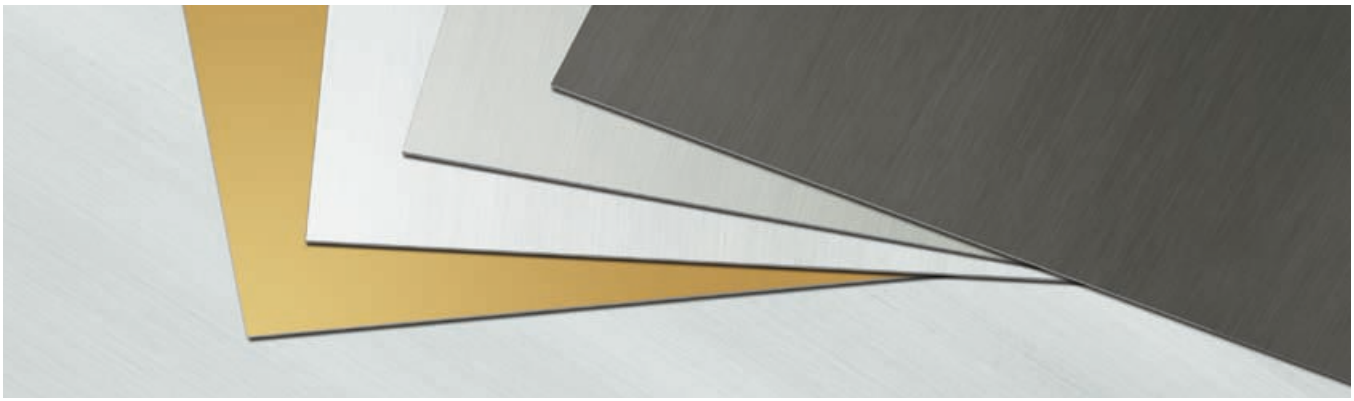

The Material with a Future.

In the context of the discussion on sustainability construction, the environmental compatibility of building products is being given greater significance, and accordingly influences the decision making, in the selection of materials, by the owners of buildings and planners. Focus is also given to the important consideration of the expenditure of energy consumption, during the manufacturing of the material, and additional energy saving is achieved by the high recycling rate.

RHEINZINK's environmental compatibility has high value. Ecological yardsticks have been set for the extraction and processing of the raw material. The consumption of energy is extremely low and our modern production facilities reduce emissions to a minimum. RHEINZINK is 100% recyclable and its use over many decades is the yardstick of its strength. Its use as a roof covering, facade cladding and roof drainage, is given high value, since the consumption of energy in the recycling, amounts to only 5% of the primary energy content. The decision to use RHEINZINK is also a great benefit to future generations. Thanks to the recycling rate of 95%, a further reduction of the energy requirement is achieved in the manufacturing process, as production scrap is passed back to the melting process, without further pre-handling.

In addition to exemplary ecological characteristics RHEINZINK is convincing in terms of its aesthetic appearance. It can be delivered in various product lines and versions.



RHEINZINK-PATINA is the classic line. The bright rolled version (prePATINA bright rolled), in the course of time due to atmospheric influences, takes the form of a natural patina. With the pre-weathered variants, the natural material of prePATINA blue-grey and prePATINA graphite-grey, have from the beginning a classical, typical zinc, blue-grey and graphite-grey appearance. This product line with its pre-weathered variants will age over time. The blue-grey and graphite-grey appearance of the RHEINZINK-PROTECT LINE is however protected from aging, in the longer term, by a transparent protection coating

RHEINZINK – COLOR LINE, with its coloured RHEINZINK variants, offers additional design possibilities for roofing, facade cladding and architectural detailing. Currently it is available for delivery in the colours RHEINZINK-blue, RHEINZINK-tile-red, RHEINZINK-moss-green, RHEINZINK-pearl-gold and RHEINZINK-nut-brown. RHEINZINK – COLOR LINE retains the metal's outstanding processing characteristics.



1



2



3



4

1 *QUALITY ZINC Certificate*
2 *TÜV Certificate ISO 9001:2008, ISO 14001:2004 and ISO 50001:2011*
3 *IGEF Certificate*
4 *IBU Environmental Declaration*

Please see www.rheinzink.com for many other exemplary solutions for working creatively with RHEINZINK.
We would also be pleased to send you detailed information on the diverse RHEINZINK-Program!

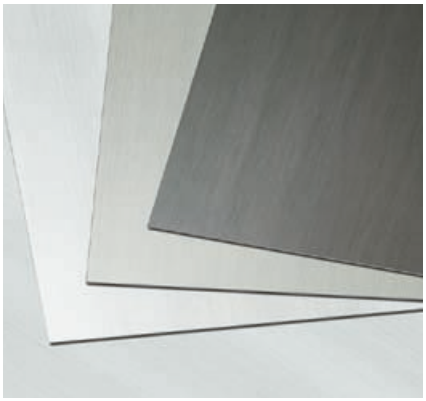



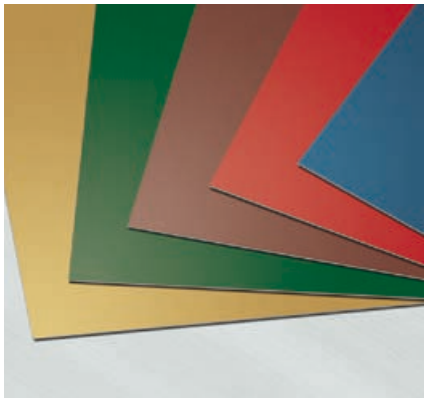

Diversity instead of Monotony –
The RHEINZINK-Product Lines

PATINA

PATINA LINE
Living Material

Surface Finishes:
prePATINA bright rolled
prePATINA blue-grey
prePATINA graphite-grey

Convincing arguments:

- Natural material
- Natural patina formation
- Tried and tested processing characteristics
- For roof, facade, roof drainage and architectural details
- Excellent tensile and ductile characteristics
- Long life and maintenance-free
- 100% recyclable

PROTECT

PROTECT LINE
Pure and durable

Surface Finishes:
PROTECT blue-grey
PROTECT graphite-grey

Convincing arguments:

- Natural material
- Optical durable protection thanks to the transparent coating
- For roof, facade and architectural details
- Excellent tensile and ductile characteristics
- Long life and maintenance-free
- 100% recyclable

COLOR

COLOR LINE
Unlimited Versions

Surface Finishes (standard colours):
RHEINZINK-blue
RHEINZINK-tile-red
RHEINZINK-moss-green
RHEINZINK-pearl-gold
RHEINZINK-nut-brown

Convincing arguments:

- Natural material
- RHEINZINK-material quality with coloured coating
- Unlimited design variations
- Tried and tested processing characteristics
- For roof, facade and architectural details
- Excellent tensile and ductile characteristics
- Long life
- 100% recyclable

RHEINZINK-PATINA, RHEINZINK-PROTECT, RHEINZINK-COLOR and RHEINZINK-INTERIEUR
are registered trade names of RHEINZINK GmbH & Co. KG

© 2010 RHEINZINK GmbH & Co. KG

RHEINZINK®

RHEINZINK U.K.
Wyvern House · 55-61 High Street
Frimley · Surrey GU16 7HJ
United Kingdom

Tel.: +44 1276 686725
Fax: +44 1276 64480

info@rheinzink.co.uk
www.rheinzink.co.uk

104928-RZ-UK_ZA-013-01-13_KA