SCHEME 1 & 2: YW REF: H-3-263-773

SCHEME 3: YW REF: H-3-263-772

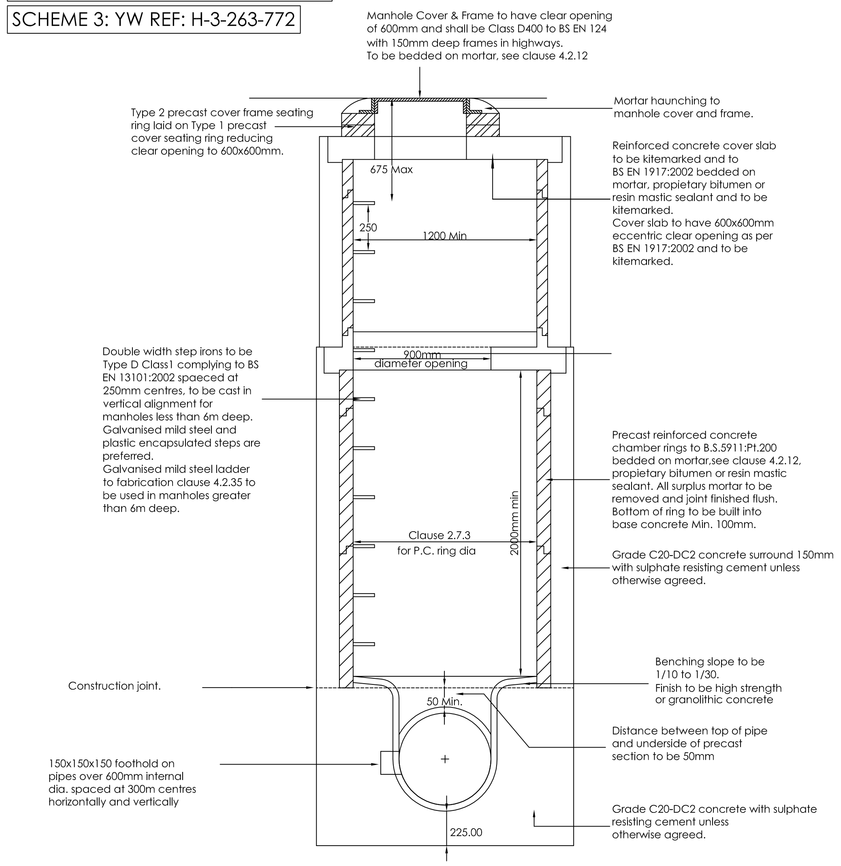

MANHOLE TYPE A.

Depth from Ground level to soffit of pipe above 3.0m

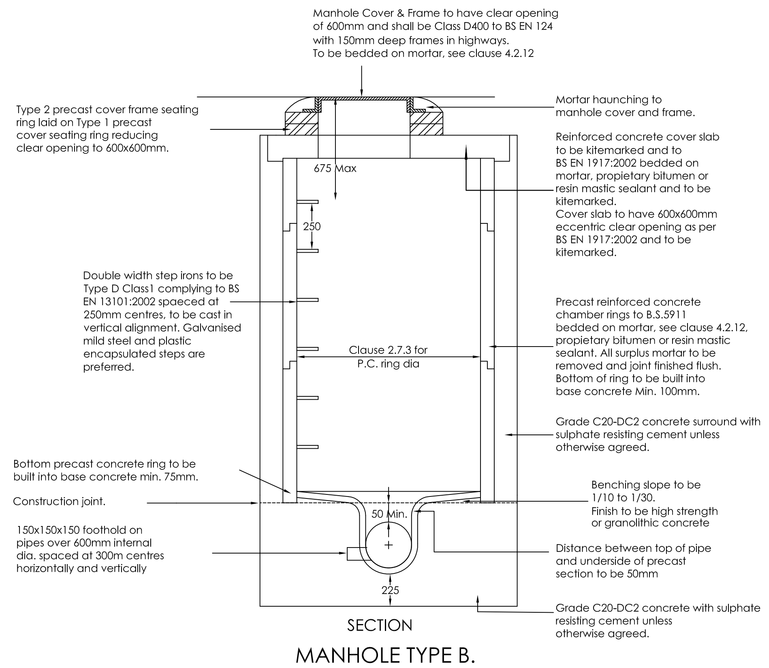

MANHOLE TYPE B.

Depth from Ground level to soffit of pipe between 1.5m - 3.0m

NOTE
Double width step irons required to all manholes up to 6m deep.

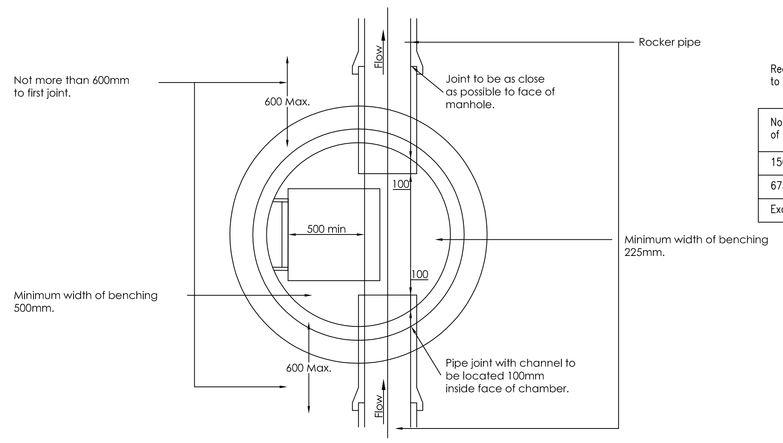

Recommended length of rocker pipe to be as shown in table below

Nominal bore of pipe (mm)	Effective Length (m)
150 – 600	0.6
675 – 750	1.0
Exceeding 750	1.25

PLAN OF TYPE A & B
TYPICAL MANHOLE DETAIL
DEPTH TO CROWN < 3.0m (CHAMBER HEIGHT NOT LESS THAN 900mm)
TYPE 1 OR TYPE B IN W.A.A.
SEWERS FOR ADOPTION

NOTE
Steeper Gradients to sewer are preferred to the use of backdraps. A backdrop rodding eye is not permitted within the access shaft

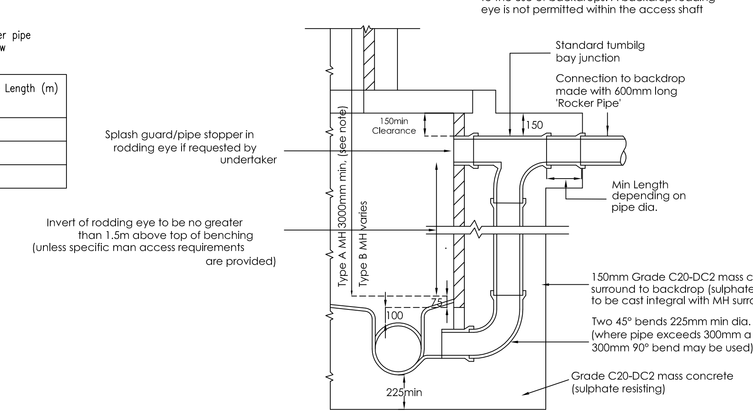

BACKDROP TO MANHOLE

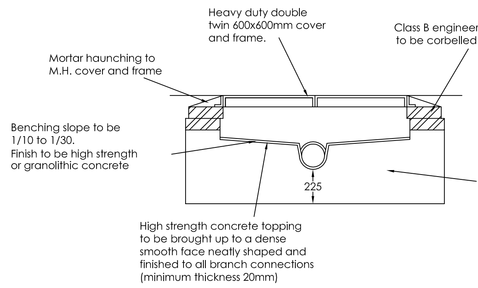

MANHOLE TYPE S PLAN

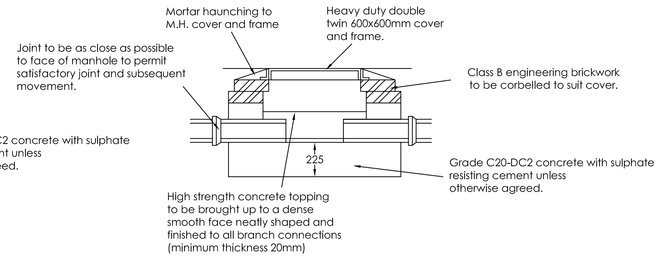

MANHOLE TYPE S PLAN

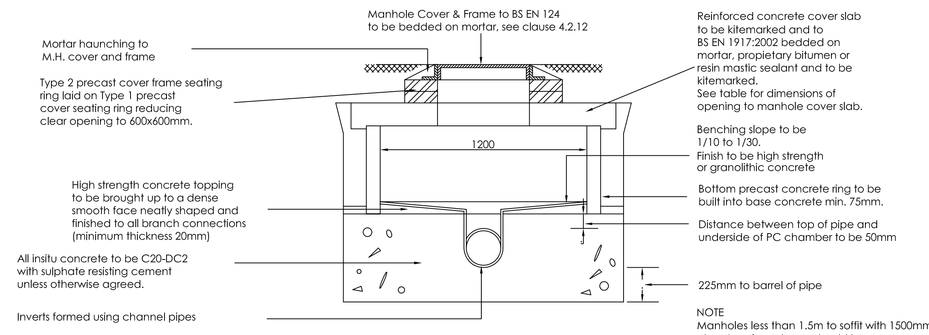

NOTE
Manholes less than 1.5m to soffit with 1500mmØ chamber size or larger should have a 1220x600mm opening (central or eccentric) sited over channel with double twin 600x600mm covers.

MANHOLE TYPE B1 / E

Depth from Ground level to soffit of pipe less than 1.5m

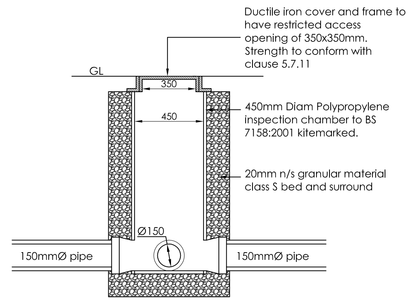

DEMARCATION CHAMBER DETAIL

Depth from cover level to invert level of pipe chamber greater than 1.2m. Maximum lateral drain diam 150mm

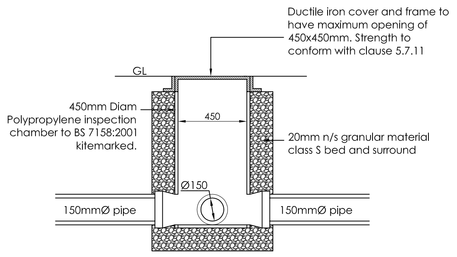

DEMARCATION CHAMBER DETAIL

Depth from cover level to invert level of pipe chamber less than 1.2m. Maximum lateral drain diam 150mm

Minimum depth of Lateral drains

Location	Minimum Depth (m)
Gardens	0.9
Agricultural/Open spaces	0.9
Highways (inc footways)	1.2

Demarcation chamber covers & frames

Surface	Class (Loading in kN)	Loading
Road	D400	Vehicle Impact
Footway & Driveway	B125	Occasional vehicle loading
Gardens	A15	Pedestrian/cyclist

Pipes

Diameter (mm)	Gradient	
	Foul	S.W.
100	1:80	1:100
150	1:80	1:150
225	1:125	1:225

Vitrified clay pipes to BS EN 295 kitemarked.
Unplasticised PVC pipes to BS 4660:200 & BS EN 1401-1 kitemarked.
Structured Wall Unplasticised PVC pipes to WIS 4-35-01 kitemarked.

LATERAL DRAIN BEDDING DETAIL

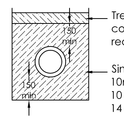

Class S bedding to be used when pipe is more than 1200mm from highway surface. Concrete bed and surround required when less than 1200mm from highway surface.

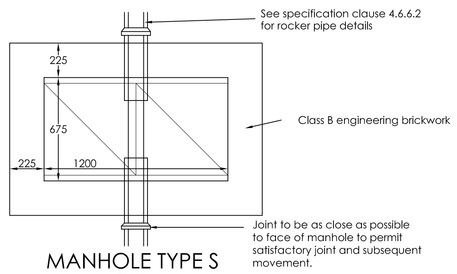

MANHOLE TYPE S

PLAN

Depth from ground level to soffit of pipe <1.0m

Note
All Drainage works and materials to conform with 'Sewers For Adoption' 6th Edition.

Chambers
Type C, D, E & F are non preferred chambers. For type 'B' chambers less than 1.2m from top of benching to the underside of the cover slab, shall have the cover fixed in the centre of the slab and the channels intersecting beneath the cover.

Covers
The minimum size for manhole covers is 600mm by 600mm. Manhole covers to be class D400 and have 150mm deep frames where located in the highway.

Step Irons / Ladders
All step irons shall be double rung and complying clause 4.2.31.
Step irons are required for all manholes, up to 6 metres deep.

Brickwork
All brickwork to be constructed using class B engineering solids.

Note:
Under carriageway backfill to be Type 1 granular material

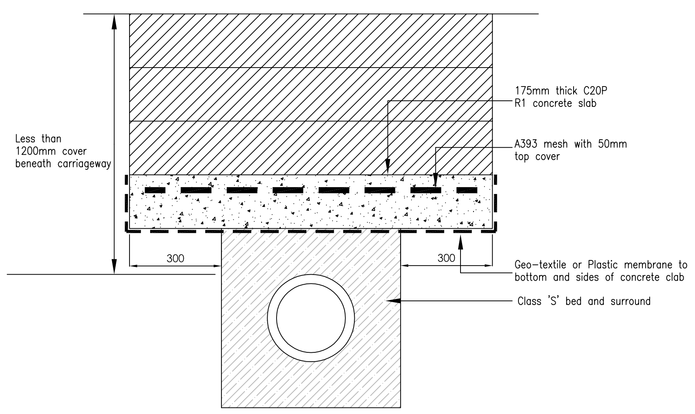

CONCRETE PIPE PROTECTION

1. ALL ADOPTABLE SEWER WORKS AND MATERIAL TO BE IN ACCORDANCE WITH "SEWERS FOR ADOPTION" 6th EDITION, THE RELEVANT BRITISH/EUROPEAN AND YORKSHIRE WATER'S STANDARD/REQUIREMENTS/ADDENDUM TO THE MECHANICAL AND ELECTRICAL SPECIFICATION AND KITEMARKED. ALL ADOPTABLE SEWERS TO BE BSI KITEMARK [CERTIFIED TO WIS 4-35-01 and BS EN 13476]
2. MANHOLE COVERS SHALL/MUST HAVE A CLEAR OPENING OF 600mm AND SHALL BE CLASS D400 TO BS EN 124 WITH 150mm DEEP FRAMES IN HIGHWAYS OR CLASS B 125 IN FOOTWAYS, PEDESTRIAN AREAS AND COMPARABLE LOCATIONS.
3. FILLED GROUND MUST BE FILLED AND CONSOLIDATED UNDER THE SUPERVISION AND TO THE SATISFACTION OF YORKSHIRE WATER BEFORE ANY SEWER WORKS ARE CARRIED OUT.
4. YORKSHIRE WATER IS **NOT** OBLIGED TO ACCEPT FILTER DRAIN/LAND DRAINAGE RUNOFF INTO THE PUBLIC SEWER NETWORK OR ADOPTABLE DRAINAGE SYSTEM (DIRECTLY OR INDIRECTLY). AN ALTERNATIVE METHOD OF DISPOSAL OF THE LAND DRAINAGE RUNOFF WILL THEREFORE BE REQUIRED AND YOU WILL HAVE TO LIAISE WITH THE LOCAL AUTHORITY. LAND DRAINAGE SECTION WITH REGARD TO THE DISPOSAL OF THE FILTER DRAIN/LAND DRAINAGE RUNOFF.
5. COVER SLABS MUST CARRY THE BSI KITEMARK OR WILL BE REJECTED BY YORKSHIRE WATER INSPECTOR. WHERE THE CLEAR OPENING OF THE KITEMARKED PRODUCT IS DIFFERENT TO THAT OF THE COVER AND FRAME, A LOADING BEARING SLAB SHOULD BE FITTED ABOVE THE COVER SLAB TO BRING THE SIZE DOWN TO 600x600mm FOR THE YORKSHIRE WATER SPECIFIED COVER SIZE. PLEASE REFER TO CONCRETE PIPE SYSTEMS ASSOCIATION (CPSA), 'TECHNICAL BULLETIN' ISSUED AUTUMN 2004 FOR KITEMARKED COVER SLAB OPENING SIZES.
6. SULPHATE RESISTANT CEMENT (C20-DC2) AND PRECAST CONCRETE PRODUCTS MUST BE USED OR A LABORATORY REPORT PROVIDED PROVING THAT SUCH PRECAUTIONS ARE NOT NECESSARY.
7. THE ADOPTABLE SEWERS SHOULD BE A MINIMUM OF 1m AND MANHOLES 0.5m FROM KERB FACES AND SERVICE MARGINS.
8. **SEWERS MUST HAVE 5m CLEARANCE FROM TREES AND HEDGES** (PLEASE ALSO REFER TO FIGURE 2.3 ON PAGE 33 IN "SEWERS FOR ADOPTION" 6th EDITION FOR RESTRICTIONS ON TREE PLANTING ADJACENT TO SEWERS).
9. BEDDING AND BACKFILL MATERIAL TO CONFORM TO THE REQUIREMENT OF WATER INDUSTRY SPECIFICATION 4-08-02 (TABLE A2.) ADOPTABLE SEWERS TO BE LAID IN CLASS "S" BEDDING (150mm GRANULAR BED AND SURROUND), WHERE DEPTH OF COVER TO TOP OF THE SEWER IS LESS THAN 1.0m IN HIGHWAYS AND VERGES (OR LESS THAN 900mm IN NONE VEHICULAR ACCESS AREAS) THEN A CONCRETE SLAB SHOULD BE PROVIDED AND/VEGRANULAR BED AND SURROUND.
10. ALL PIPEWORK 300mm DIAM. OR LESS TO BE VITRIFIED CLAY CONFORMING WITH BS 65. MINIMUM CRUSHING STRENGTHS TO BE AS FOLLOWS: 100mm DIA 40kN/m, 150mm DIA 40kN/m, 225mm DIA 45kN/m and 300mm DIA 72kN/m.
11. ALL PIPEWORK 375mm DIAM. OR GREATER TO BE CONCRETE CLASS 120, 54kN/m MINIMUM CRUSHING STRENGTH.
12. THE CHAMBER SIZE OF MANHOLES WITH MORE THAN ONE CONNECTION IN THEM MAY NEED TO BE INCREASED AN INCREMENT TO ACCOMMODATE THE CONNECTIONS AND BENDS.
13. YORKSHIRE WATER POLICY IS NOT TO ACCEPT TYPE "C" BRICK MANHOLES AND 1050mm DIAM. MANHOLE RINGS. INSTEAD IT IS PREFERRED THAT YOU USE A TYPE "B" MANHOLE WITH 1200mm DIAM. OR 1500mm DIAM. RINGS, WITH THE OPENING SIGHTED OVER THE CHANNEL WHERE DEPTH OF COVER TO PIPE SOFFIT IS 1.1.5m.
14. ALL HIGHWAY WORKS AND MATERIAL TO CONFORM WITH KIRKLEES COUNCIL SPECIFICATION.
15. GULLY COVER AND FRAMES SHALL BE D400 DUCTILE IRON AND COMPLY WITH EUROPEAN STANDARD BS EN 124. THOSE SIGHTED IN ACCESSWAYS AND MEWS COURTS MUST BE SUITABLE FOR USE IN PEDESTRIAN AREAS.
16. SULPHATE RESISTANT CEMENT(C20 DC2) AND PRECAST CONCRETE PRODUCTS MUST BE USED OR A LABORATORY REPORT PROVIDED PROVING THAT SUCH PRECAUTIONS ARE NOT NECESSARY.
17. ADOPTABLE SEWERS TO BE LAID IN MAXIMUM 3m LENGTHS UNLESS THERE IS A SPECIFIC OPERATIONAL NEED TO LAY IN LONGER LENGTHS.
18. PLASTIC CHANNEL SECTIONS IN MANHOLES ARE NOT ACCEPTED BY YORKSHIRE WATER AND CLAYWARE CHANNELS ARE TO BE USED.

RISK ASSESSMENT: SIGNIFICANT RISKS THAT CANNOT BE DESIGNED OUT		
RISK	LEVEL OF RISK (H/M)	SUGGESTED ACTION
DEEP EXCAVATIONS ASSOCIATED WITH NEW DRAINAGE WORKS	HIGH	ENSURE ALL EXCAVATIONS HAVE ADEQUATE TRENCH SUPPORTS
HANDLING LARGE DIAMETER MANHOLE RINGS AND CIRCULAR PIPES	HIGH	USE CORRECT LIFTING EQUIPMENT AND ENSURE OPERATIVES WEAR APPROPRIATE PROTECTIVE CLOTHING/HARD HATS/CORRECT PPE.
CONTACT WITH SEWAGE	MED	OPERATIVES TO USE CORRECT BREATHING EQUIPMENT/CORRECT PPE
NOISE	MED	OPERATIVES TO USE CORRECT EAR PROTECTION/CORRECT PPE
DRAINAGE EXCAVATIONS ADJACENT EXISTING BOUNDARY STRUCTURES	HIGH	ENSURE CORRECT SUPPORTS ARE PROVIDED TO TRENCHES AND BUILDINGS WHERE REQUIRED
DRAINAGE EXCAVATION IN PUBLIC HIGHWAY	HIGH	ENSURE CORRECT USE OF TRENCH SUPPORTS IN EXCAVATION AND SCREEN BARRIERS TO PROTECT MEMBERS OF THE PUBLIC
MAINTAIN ACCESS TO ADJACENT PROPERTIES AND OCCUPIERS	HIGH	ENSURE WORKS ARE PROTECTED WITH BARRIERS AND SIGNS TO GUIDE THE PUBLIC AWAY FROM THE WORKS
DRAINAGE EXCAVATIONS NEAR TO EXISTING SERVICES	HIGH	ENSURE WORKS ARE PROTECTED WITH BARRIERS AND SIGNS TO GUIDE MEMBERS OF THE PUBLIC AWAY FROM THE AREA
WORKING IN CONFINED SPACES. WORKING IN DRAINS AND MANHOLES	HIGH	CONFINED SPACES WORKING TRAINED PERSONNEL ONLY TO CARRY OUT WORKS UNDER A PERMIT TO WORK SCHEME IMPLEMENTED BY CONTRACTOR. GAS TESTING TO TAKE PLACE BEFORE ALL ENTRIES TO CONFINED SPACES.
WORKING IN HIGHWAYS / RISKS FROM VEHICLE AND PLANT	HIGH	ALL WORKS TO BE SIGNED AND FENCED FROM NORMAL VEHICULAR TRAFFIC. ALL WORKERS TO WEAR HIGH VISIBILITY CLOTHING. ALL PLANT TO HAVE VISUAL AND AUDIBLE WARNING SYSTEMS.
ROAD AND DRAINAGE CONSTRUCTION	HIGH	ALL EXCAVATIONS TO BE ADEQUATELY FENCED OFF AND SUPPORTED DURING CONSTRUCTION. ALL OPERATIVES TO BE TRAINED IN CORRECT METHODS OF LIFTING AND WORK IN ACCORDANCE WITH LOLER REGS
OPEN WATERCOURSE ON SITE	LOW	ADEQUATE SIGNAGE AND FENCING TO BE INSTALLED DURING CONSTRUCTION. SITE TRAFFIC TO BE DIRECTED AWAY FROM EDGE OF BANKING ON SITE. LIFEBUOYS TO BE PROVIDED A SAFE DISTANCE FROM WATERS EDGE. ALL OPERATIVES TO BE TRAINED IN RESCUE PROCEDURE AND RAISING ALARM.
IT IS ASSUMED THAT WORKS ASSOCIATED WITH THIS DESIGN WILL BE UNDERTAKEN BY A PERSON OR PERSONS WHO ARE COMPETANT AND HAVE THE REQUIRED LEVEL OF EXPERIENCE AND EXPERTISE		

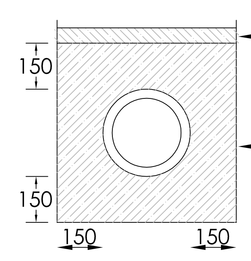

Class S Bedding Factor 2.5
Scale 1:10

Nominal bore of pipe (mm)	Size mm Single sized	Size mm Graded
100–125	10	–
150–200	10 or 14	14 to 5
225–300	10, 14 or 20	14 to 5 or 20 to 5
375–500	14 or 20	14 to 5 or 20 to 5
Exceeding 500	14, 20 or 40	14 to 5, 20 to 5 or 40 to 5

All granular material to be single sized or graded in accordance with BS 882: 1983, sintered pulverized-fuel ash to BS 3797: Part 2: 1976 and air-cooled blast furnace slags to BS 1047: 1983 are suitable.

Rev B. Type B1/E opening notation updated. 13.09.17 LM
Rev A. YW notes updated. 21.07.17 LM

Haigh Huddleston & Associates
Civil Structural Engineering Consultants
Firth Buildings, 99 - 101 Leeds Rd, Dewsbury, WF12 7BU t 01924 464342 f 01924 450662
e trevor.haigh@haighhuddleston.co.uk

Client
HARRON HOMES

Project
BIRCHENCLIFFE, HUDDERSFIELD

Detail
STANDARD MANHOLE DETAILS

PRELIMINARY ISSUE

Dwn	Chkd	Date	Scale	Dwg No.
LM		MAY-16	1:20 @A0	E16/6641/006B