REVISIONS

# Proposed Construction Phase Archaeology Protection Plan

1:1000




## Proposed Protective Fencing Around Archaeology

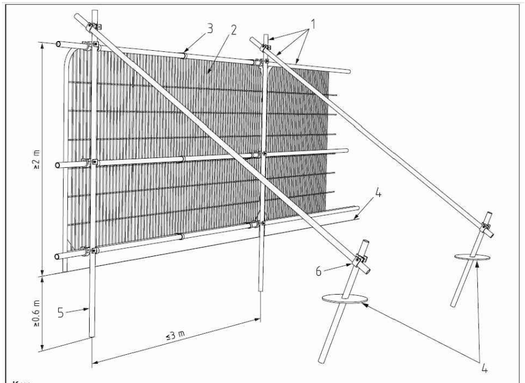


Key

1 Standard scaffold poles
2 Heavy gauge 2 m tall galvanized tube and welded mesh infill panels
3 Panels secured to uprights and cross-members with wire ties
4 Ground level
5 Uprights driven into the ground until secure (minimum depth 0.6 m)
6 Standard scaffold clamps

**KEY**

**PROTECTIVE FENCING**
**(Refer to typical detail)**

**ARCHAEOLOGICAL PROTECTION ZONE**
**(Including 5m offset from edge of Archaeological feature)**

**NOTE**
Refer to the Archaeology Report (On Site Archaeology Ltd - OSA12EX08WSI) for details, and method statements for works within Archaeological Protection Zones.

**Planning**

DLA LANDSCAPE & URBAN DESIGN
www.dla-landscape.co.uk
55 St Paul's Street
LEEDS | LS1 2TE
T : 0113 887 3100 E : info@dla-landscape.co.uk

PROJECT
LINDLEY MOOR

TITLE
CONSTRUCTION PHASE
ARCHAEOLOGICAL PROTECTION

SCALE
1:1000 @ A2

DATE
12/01/16

DRAWN
LM

REVIEWED
MJB

DRAWING NO
M9016-001 103

REVISION
-

FILE PATH
T:\9014\9014-006\CAD\05-Autocad\Dwgs